INST.No. INE-811

CHINO

# Digital Program Setter

# KP3000

## [General]

# INSTRUCTIONS

CHINO

# Table of Contents


**1. Introduction** ..... - 1 -

**2. For safe use of the product** ..... - 3 -
- 2.1 Prerequisites for use ..... - 3 -
- 2-2. Symbol mark ..... - 3 -
- 2-3. Important ..... - 4 -

**3. Model code list** ..... - 5 -

**4. Mounting and wiring** ..... - 6 -
- 4-1. External dimensions ..... - 6 -
- 4-2. Mounting ..... - 7 -
- 4-3. Wiring ..... - 9 -

**5. Name of various parts** ..... - 17 -
- 5-1. Entire overview ..... - 17 -
- 5-2. Overview of the front panel ..... - 17 -
- 5-3. Details of the front panel ..... - 18 -

**6. Operation screen** ..... - 20 -
- 6-1. Time display screen ..... - 20 -
- 6-2 Program pattern overall display screen ..... - 20 -
- 6-3. Operation screen and setting screen ..... - 21 -

**7. Setting screen** ..... - 22 -
- 7-1. Basics of setting ..... - 22 -
- 7-2. Mode 0 [Settings of parameters that are being executed] - 24 -
- 7-3. Mode 1 [Settings related to run status] ..... - 25 -
- 7-4. Mode 2 [Settings related to program pattern] - 27 -
- 7-5. Mode 5 [Settings related to SV] ..... - 30 -
- 7-6. Mode 6 [Setting related to time event] ..... - 31 -
- 7-7. Mode 8 [Setting related to communications] - 32 -
- 7-8. Mode 11 [Setting related to system] ..... - 35 -
- 7-9. Initializing the setup parameter ..... - 37 -
- 7-10. Precautions while setting ..... - 38 -
- 7-11. Error message ..... - 39 -

**8. Initial settings** ..... - 41 -

**9. Operation** ..... - 42 -
- 9-1. Confirmations before operation ..... - 42 -
- 9-2. Program operation and run operation ..... - 42 -
- 9-3. Trial operation ..... - 45 -
- 9-4.Precautions during operation ..... - 46 -

**10. Detailed explanation of main functions** - 48 -
- 10-1 External signal input ..... - 48 -
- 10-2. External signal output ..... - 50 -
- 10-3. Master slave synchronous operation ..... - 51 -
- 10-4. Communication interface ..... - 53 -

**11. Engineering Port** ..... - 54 -

**12. Trouble shooting** ..... - 55 -

**13. Checking and maintenance** ..... - 56 -
- 13-1. Checking ..... - 56 -
- 13-2. Life component ..... - 56 -
- 13-3. Disposal ..... - 56 -

**14. Explanation of terms** ..... - 57 -

**15. Accessories** ..... - 58 -
- 15-1. Front protective cover ..... - 58 -
- 15-2. Contact protection element ..... - 58 -

**16. Specifications** ..... - 59 -

**17. Parameter list table** ..... - 61 -

**18. Parameter directory list table** ..... - 63 -

**19. Engineering unit sticker** ..... - 65 -

# 1. Introduction

Thank you for purchasing Digital Program Setter 'KP 3000 series'.

KP 3000 series is Digital Program Setter with output accuracy of ±0.1%, output update cycle of approximately 0.5 seconds and front size of 96X96mm.
Storing up to 30 types of program patterns etc. are the various functionalities that are provided as standard provisions.
Besides a digital indicator with large easy to view LED display, various settings have an interactive system with high resolution dot matrix LCD display and handling is also easy with precise control.

Understand the setter properly and read this instruction manual beforehand in order to avoid any trouble.
This is a 'General' instruction manual. For specification regarding communications, read 'Communication' instruction manual along with this manual.

## Request

**－For the persons doing instrumentation, installation and sales－**

Be sure to handover this instruction manual to the persons using this product.

**－ For the users of this product －**

Preserve this instruction manual until you scrap this product.
Write down and keep the contents of setting.

## Notice

1. You should not copy or forward fully or partially this document without prior notice.
2. The contents of this document may be changed without notice.
3. We have taken enough care regarding the contents of this document however if at all you notice a mistake, contact our nearest office.
4. Please understand that regarding the result of the operation, whatever is the result the company will not be responsible.

## ■Before use

After opening the pack, confirm the following before using the product. Although it is rare but if you notice anything wrong, contact your dealer or our nearest office.

### 1. Confirm the exterior

Confirm that the product is not broken on the outer side.

### 2. Confirm the model code

Confirm that the model code is that of the model that you purchase.

◆Model code label and its location

A label as shown below is pasted on the upper surface of the setter unit.

KP3□□□□□□□□－□□□ ← Model code
□□□□□□□□□□ ← Serial number
MADE IN JAPAN

### 3. Confirm the accessories

The following accessories are attached to the setter, confirm them.

| Name | Quantity | Remarks |
|---|---|---|
| Mounting bracket | 2 (1 set) | For panel mounting |
| Instruction manual (General) | 1 | This document |
| Instruction manual (Communications interface) | 1 | Attached to communications specifications only (in CD-R) |

When accessories are requested separately, sometimes those are also attached.

## Attention

1. Do not drop the instrument while taking it out of the box.
2. When transporting this instrument, pack the instrument in the box and then put it with cushions in another box. We recommend keeping the box for transport.
3. When not using the instrument for a while after taking it from the panel, put the instrument in the box and store at room temperature and in a dust free atmosphere.

# 2. For safe use of the product

In order to use the setter safely, read the following precautions and understand them.

## 2.1 Prerequisites for use

The setter is a general product of component type that is to be used by mounting it in a panel for instrumentation inside a room. Do not use it in any other condition.

When using, design a fail safe on the final product side and review regularly and use the setter after confirming the safety of the system. For the wiring, adjustment and operation of the setter contact a professional having knowledge of instrumentation.

It is necessary that the people actually using this setter read this instruction manual, and have enough understanding of various precautions and the basic operations of the setter.

## 2-2. Symbol mark

The following symbol marks are used in the product itself and in this instruction manual hence understand the meaning of these symbol marks properly.

| Symbol mark | Meaning |
|---|---|
| ⚠Warning | If there is a possibility of death or severe injuries then it explains the precautions to avoid that possibility. |
| ⚠Precaution | If there is a possibility of small injuries or a possibility of the setter or its peripheral devices getting damaged then it explains the precautions to avoid those possibilities. |
| ⏚ | It is a symbol for ground terminal. Always connect the ground terminal to protective grounding. |

**⚠ Warning**

**Perchlorate Material**

This instrument uses battery with Perchlorate Material.

Special handling may apply, see

http://www.dtsc.ca.gov/hazardouswaste/perchlorate

## 2-3. Important

| ⚠ Warning | In order to avoid severe accidents always read these contents and understand them. |
|---|---|

**1. Confirm the power supply voltage and wiring**

Before supplying the power to the instrument, check that the wiring is correct, power supply voltage matches with the rated voltage and grounding is done.

**2. Install over current protection device**

The setter does not have a power supply switch. Install an over current protection device (Breaker etc.) that matches the rating specifications, in the power supply of the setter.

**3. Protection of terminal**

To prevent electric shock, provide the terminal of the setter with safety measures such that the user will not directly be able to touch the final product.

**4. Installing the safety device**

Regarding the use of a device that anticipates a big loss due to failure of the setter and the peripheral devices, always install a safety device for preventing these losses and implement fail safe design in the final product. Do not use it in important utilities facilities in which human life, atomic energy, aviation, space etc, are involved.

**5. Do not put your hands inside the setter**

Do not put your hand or a tool inside the setter. You may get an injury or an electric shock.

**6. Power cut off in case of suspicion**

If there is an offensive smell, a strange noise or smoke or if the temperature increases abnormally, it is very risky hence cut off the power supply immediately and contact the dealer or our nearest office.

**7. Prohibiting repairing and remodeling**

If repairing or remodeling is necessary, contact the dealer or our nearest office. Only the service engineers appointed by our company will change the parts, do the repairing and remodeling.

**8. Strictly follow the instruction manual**

In order to use the setter correctly and safely, follow this instruction manual. Please understand beforehand that our company will not at all be responsible for any claims for injury, damage, and passive damage due to wrong use of the product.

# 3. Model code list

## KP3 - ⑤ 0 C ⑧ ⑨ ⑩ - ⑫ ⑬ ⑭

| ⑤ Outputs signal | |
|---|---|
| 1 : Digital output (RS422A) | |
| 2 : Analog output (4-20mA) | |
| 4 : Analog output (0-10V) | |
| 5 : Analog output (0-1V) | |
| 6 : Analog output (Others) | |
| 7 : Digital output (RS485) | |
| **⑧Option zone 1** | |
| 0 : None | |
| P : External signal input 6 points | |
| T : External signal output 6 points | |
| **⑨ Option zone 2** | |
| 0 : None | |
| P : External signal input 6 points | **※ 1** |
| T : External signal output 6 points | **※ 1** |
| **⑩ Option zone 3** | |
| 0 : None | |
| R : Communication 1 port (RS232C) + External signal input 3 points | **※ 2** |
| A : Communication 1 port (RS422A) + External signal input 1 point | **※ 3** |
| S : Communication 1 port (RS485) + External signal input 3 points | **※ 2** |
| B : Communication 2 port (RS232C + RS232C) + External signal input 1 point | **※ 4** |
| C : Communication 2 port (RS232C + RS422A) + External signal input 1 point | **※ 4** |
| D : Communication 2 port (RS232C + RS485) + External signal input 1 point | **※ 4** |
| E : Communication 2 port (RS485 + RS232C) + External signal input 1 point | **※ 4** |
| F : Communication 2 port (RS485 + RS422A) + External signal input 1 point | **※ 4** |
| G : Communication 2 port (RS485 + RS485) + External signal input 1 point | **※ 4** |
| P : External signal input 6 points | **※ 4** |
| T : External signal output 6 points | **※ 4** |
| U : External signal input 8 points | **※ 4** |
| W : External signal output 8 points | **※ 4** |
| Y : External signal input 3 points + External signal output 5 points | **※ 4** |
| Z : External signal input 4 points + External signal output 4 points | **※ 4** |
| **⑫ Case color** | |
| G : Gray | |
| B : Black | |
| **⑬ IP54 panel sealing specifications and terminal cover*** | |
| 0 : None | |
| 1 : Terminal cover exists | |
| 2 : IP54 panel sealing specifications + No terminal cover | |
| 3 : IP54 panel sealing specifications + Terminal cover | |
| **⑭ Power supply voltage** | |
| A : 100-240V (AC) | |
| D : 24V (AC/DC) | |

***** Option
※1: It can be selected when output signal is 1 or 7.
※2: When output signal is 1 or 7, external signal input is 1.
※3: It can be selected when output signal is 2, 4, 5, 6, or 7.
※4: It can be selected when output signal is 2, 4, 5, or 6.
Note: Common options of zone 1,2,3 are designated form zone 3 ordering [P], [T]

# 4. Mounting and wiring

## 4-1. External dimensions

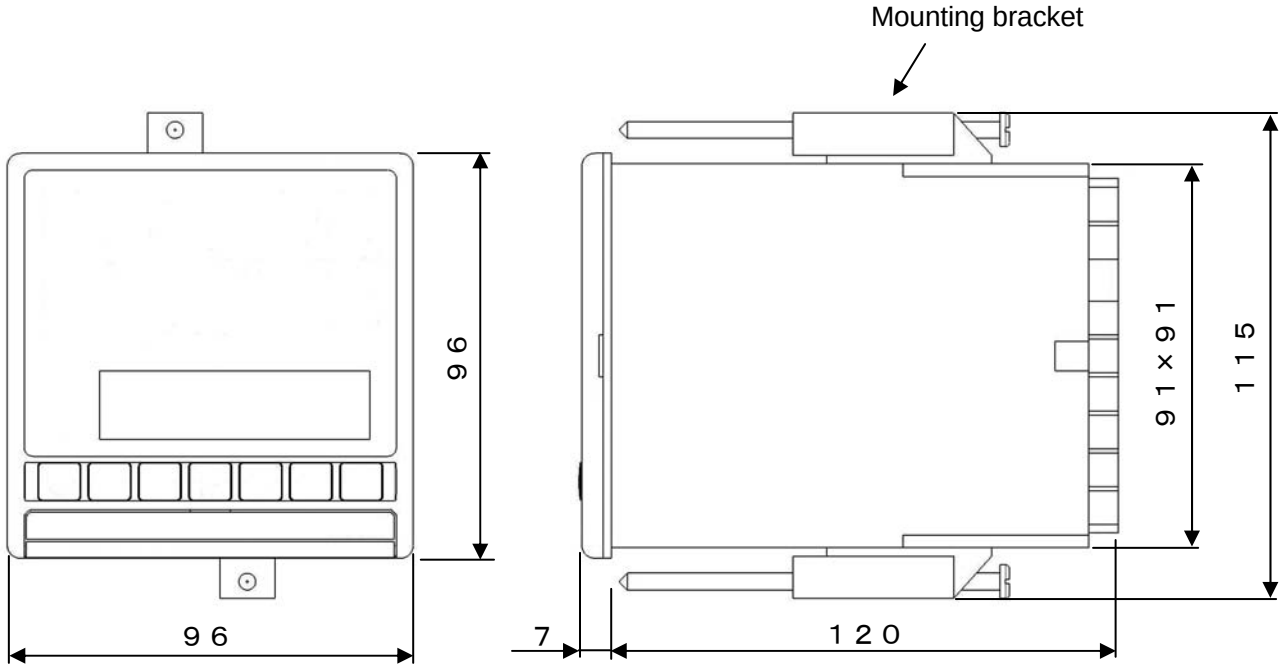


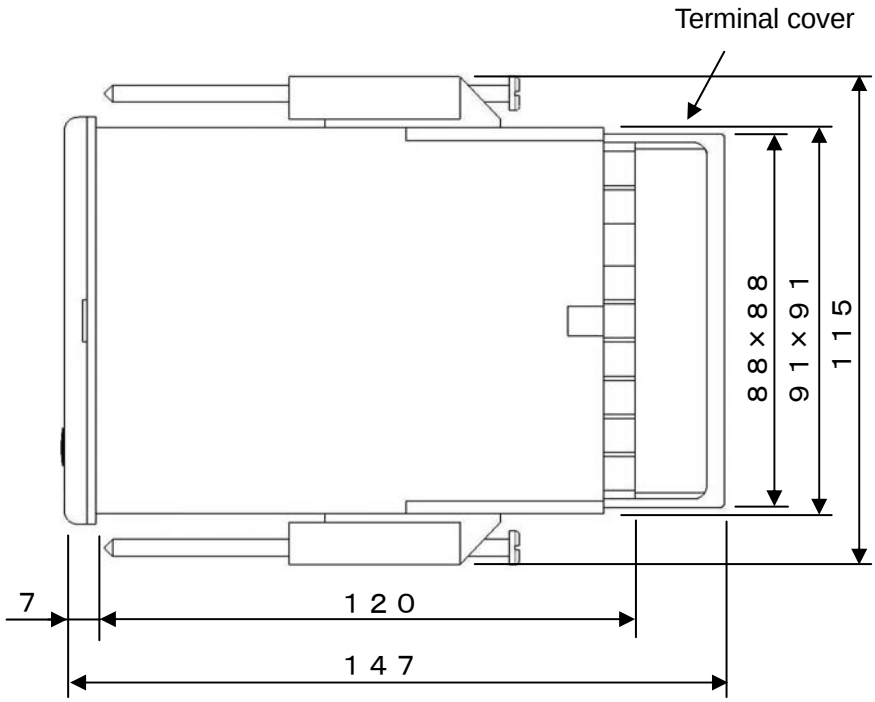


Unit: mm

## 4-2. Mounting

### 4-2-1. Panel cutout and mounting method

1. Usual mounting method

① Insert this product in panel cutout.
② Fit in the attached mounting bracket above and below and tighten the screws with the driver and fix it. When the screws are tightened the torque is '0.6 – 0.8 Nm'.
③ For IP54 panel sealing specifications, confirm that the gasket between product and panels is correct. Take care because if the gasket drifts or if there is a gap, the mounting is not proper and the water proofing function does not work.

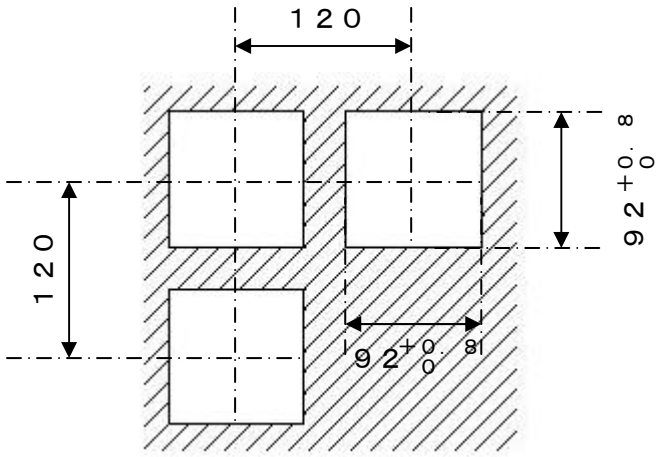


Panel cut

Unit: mm

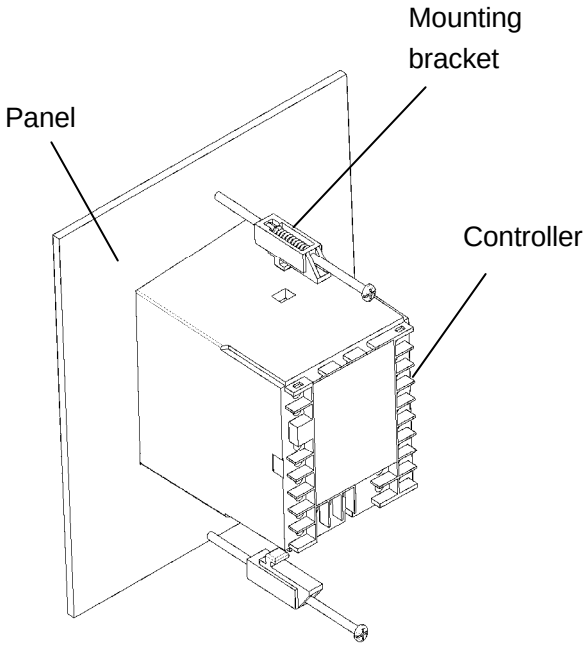


2. Closed instrumentation

① Insert this product in panel cutout.
② Fit in the attached mounting bracket above and below and tighten the screws with the driver and fix it. When the screws are tightened the torque is '0.6 - 0.8 Nm'.
③ At the time of closed instrumentation, even in the product of IP54 panel sealing specifications, as the gasket functionality between the product and the panel is lost, water proofing functionality does not work.

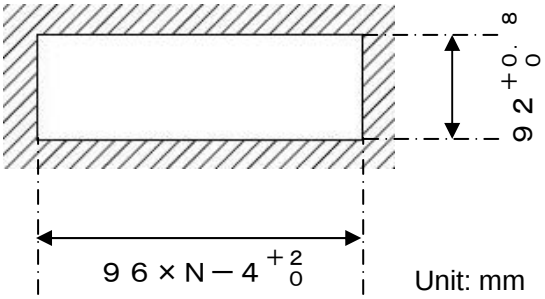


Unit: mm

N: Number of mounted instruments

Panel cutout for closed instrumentation

### 4-2-2. Installation condition

| ⚠ Precaution | In order to avoid accidents always read and understand these contents. |
|---|---|

**1. Environment**

① In a room.
② Away from direct sunlight.
③ Away from high temperatures.
④ Away from vibrations and shocks.
⑤ Away from liquids (water etc.).
⑥ Away from condensation.
⑦ Under 'Excess voltage category Ⅱ, Pollution level 2' based on EN standards.

**2. Atmosphere**

① Away from strong noise, static electricity, electric field, magnetic field etc.
② Surrounding temperature within -10 to 50°C (Less than 40°C in case of closed instrumentation), surrounding humidity within 10-90% RH.
③ Variation in temperature is less.
④ Away from corrosive gas, explosive gas, ignition gas and combustible gas.
⑤ Away from salt, iron and conductive material (Carbon, iron etc.).
⑥ Away from steam, oil and chemicals etc.
⑦ Away from dust etc.
⑧ Away from the surroundings where high temperature is generated.
⑨ Away from places where temperature remains stored.
⑩ Lot of space above the upper part of the product.
⑪ Away from wind.

**3. Mounting position**

① Installation height is less than 2,000 m above the sea level
② Mounting position is approximately 1.5m (Approximately eye level position of a person).
③ Mounting orientation longitudinal tilting is less than ±10° lateral tilting is less than ±10°.

**4. Other**

① Do not wipe the setter with an organic solvent (like alcohol).
② To avoid malfunctioning of the setter, do not use cell phones in its vicinity.
③ An obstacle may be created for television and radio sets placed near the setter.

## 4-3. Wiring

### 4-3-1. Terminal number and functionality

Depending on the product specifications, there are also places where terminal screw is not provided.

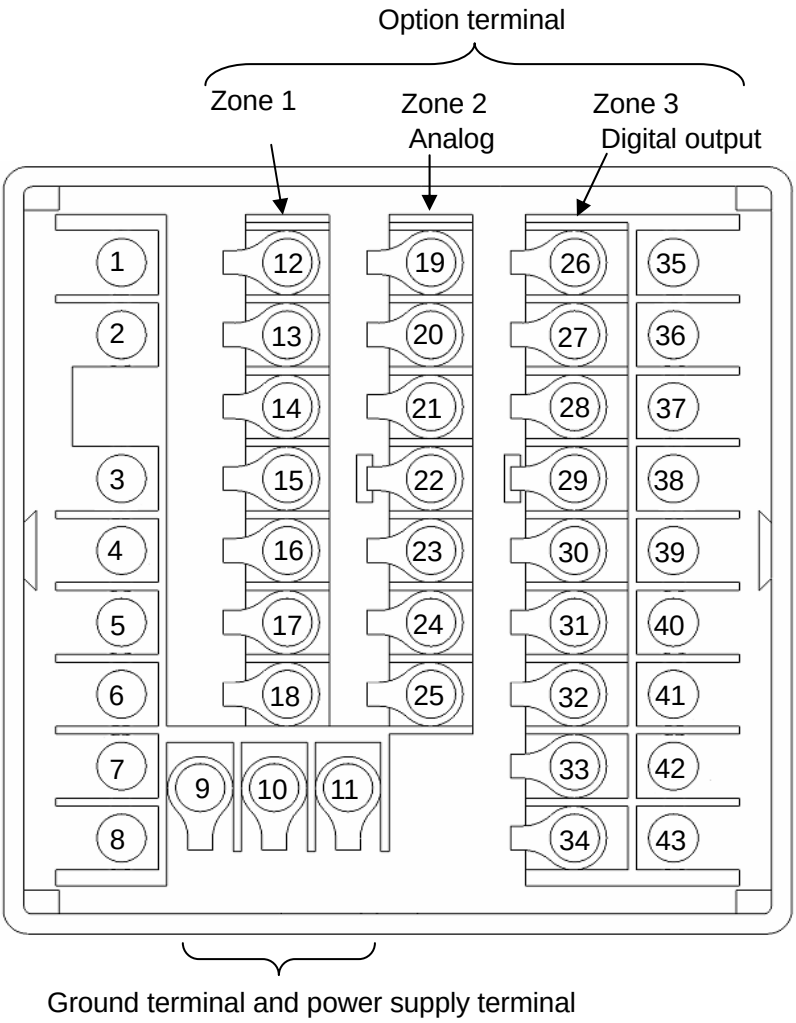


1. Power supply terminal

① General power supply specifications

| Terminal number | |
|---|---|
| ⑨ | |
| ⑩ | 100－240VAC（50/60Hz） |
| ⑪ | |

② 24V power supply specification

| Terminal number | For 24 V DC | For 24 V AC |
|---|---|---|
| ⑨ | | |
| ⑩ | 24VDC | 24VAC (50/60Hz) |
| ⑪ | | |

1. Output signal

① Analog output

| Terminal number | Current and voltage output |
|---|---|
| ⑲ | |
| ⑳ | |
| ㉑ | ⊕ |
| ㉒ | ⊖ |

When output signal is analog output, zone 2 cannot be used as option.

② Digital output

| Terminal number | RS422A | RS485 |
|---|---|---|
| ㉘ | SG | |
| ㉙ | RDA | SA |
| ㉚ | RDB | SB |
| ㉛ | SDA | SG |
| ㉜ | SDB | |

When output signal is digital output, external signal input and communication 2 port of zone 3 cannot be used as option.

③ Digital output + communications

| Terminal number | Communications RS232C (COM1) + Digital output RS422A (COM2) + External digital input 1 point | | Communications RS485 (COM1) + Digital output RS422A (COM2) + External digital input 1 point | | Communications RS232C (COM1) + Digital output RS485 (COM2) + External digital input 1 point | | Communications RS485 (COM1) + Digital output RS485 (COM2) + External digital input 1 point | | Communications RS485 (COM1) + Digital output RS422A (COM2) + External digital input 1 point | |
|---|---|---|---|---|---|---|---|---|---|---|
| ㉖ | Communications | RD1 | Communications | RD1 | Communications | RD1 | Communications | SA1 | Digital output | SA1 |
| ㉗ | | SD1 | | SD1 | | SD1 | | SB1 | | SB1 |
| ㉘ | | SG1 | | SG1 | | SG1 | | SG1 | | SG1 |
| ㉙ | Digital output | RD2 | Digital output | RDA2 | Digital output | SA2 | Digital output | RD2 | Communications | SA2 |
| ㉚ | | SD2 | | RDB2 | | SB2 | | SD2 | | SB2 |
| ㉛ | | SG2 | | SDA2 | | SG2 | | SG2 | | SG2 |
| ㉜ | | | | SDB2 | | | | | | |
| ㉝ | DI | | DI | | DI | | DI | | DI | |
| ㉞ | COM | | COM | | COM | | COM | | COM | |

When output signal is digital signal, communication 2 port of Zone 3 and external signal input are not used for option.

3. Option terminal

① Zone 1

| Terminal number | External signal input 6 points | External signal output 6 points |
|---|---|---|
| ⑫ | DI | DO |
| ⑬ | DI | DO |
| ⑭ | DI | DO |
| ⑮ | DI | DO |
| ⑯ | DI | DO |
| ⑰ | DI | DO |
| ⑱ | COM | COM |

② Zone 2

| Terminal number | External signal input 6 points | External signal output 6 points |
|---|---|---|
| ⑲ | DI | DO |
| ⑳ | DI | DO |
| ㉑ | DI | DO |
| ㉒ | DI | DO |
| ㉓ | DI | DO |
| ㉔ | DI | DO |
| ㉕ | COM | COM |

③ Zone 3

| Terminal number | Communications RS232C + External digital input 3 points | Communications RS422A + External digital input 1 point | Communications RS485 + External digital input 3 points | External signal input 6 points | External signal output 6 points |
|---|---|---|---|---|---|
| ㉖ | RD | RDA | SA | DI | DO |
| ㉗ | SD | RDB | SB | DI | DO |
| ㉘ | SG | SDA | SG | DI | DO |
| ㉙ | DI | SDB | DI | DI | DO |
| ㉚ | DI | SG | DI | DI | DO |
| ㉛ | DI | DI | DI | DI | DO |
| ㉜ | COM | COM | COM | COM | COM |
| ㉝ | | | | | |
| ㉞ | | | | | |

| Terminal number | Communications RS232C (COM1) + Communications RS232C (COM2) + External digital input 1 point | | Communications RS232C (COM1) + Communications RS422A (COM2) + External digital input 1 point | | Communications RS232C (COM1) + Communications RS485 (COM2) + External digital input 1 point | | Communications RS485 (COM1) + Communications RS232C (COM2) + External digital input 1 point | | Communications RS485 (COM1) + Communications RS422A (COM2) + External digital input 1 point | | Communications RS485 (COM1) + Communications RS485 (COM2) + External digital input 1 point | |
|---|---|---|---|---|---|---|---|---|---|---|---|---|
| ㉖ | COM1 | RD1 | COM1 | RD1 | COM1 | RD1 | COM1 | SA1 | COM1 | SA1 | COM1 | SA1 |
| ㉗ | | SD1 | | SD1 | | SD1 | | SB1 | | SB1 | | SB1 |
| ㉘ | | SG1 | | SG1 | | SG1 | | SG1 | | SG1 | | SG1 |
| ㉙ | COM2 | RD2 | COM2 | RDA2 | COM2 | SA2 | COM2 | RD2 | COM2 | RDA2 | COM2 | SA2 |
| ㉚ | | SD2 | | RDB2 | | SB2 | | SD2 | | RDB2 | | SB2 |
| ㉛ | | SG2 | | SDA2 | | SG2 | | SG2 | | SDA2 | | SG2 |
| ㉜ | | | | SDB2 | | | | | | SDB2 | | |
| ㉝ | DI | | DI | | DI | | DI | | DI | | DI | |
| ㉞ | COM | | COM | | COM | | COM | | COM | | COM | |

Note) Communication 2 ports are not insulated.

| Terminal number | External signal input 8 points | External signal output 8 points | External signal output 5 points + External signal input 3 points | External signal output 4 points + External signal input 4 points |
|---|---|---|---|---|
| ㉖ | DI | DO | DO | DO |
| ㉗ | DI | DO | DO | DO |
| ㉘ | DI | DO | DO | DO |
| ㉙ | DI | DO | DO | DO |
| ㉚ | DI | DO | DO | DI |
| ㉛ | DI | DO | DI | DI |
| ㉜ | DI | DO | DI | DI |
| ㉝ | DI | DO | DI | DI |
| ㉞ | COM | COM | COM | COM |

### 4-3-2. Basics of wiring

| ⚠ Precaution | In order to avoid accidents always read and understand these contents. |
|---|---|

1. Connecting to the terminal

① For wiring of terminal use crimp style terminal with insulating sleeve. Always use O type terminal to secure safety of power supply terminal and grounding terminal. For other types of terminals also we recommend that you use O type terminal.

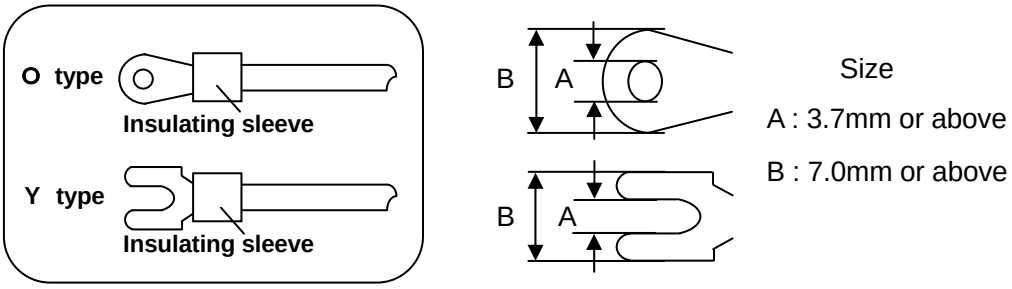


② When the terminal screws are tightened the torque is '0.6 to 0.8 Nm'. If a torque exceeding this value is applied, terminal screw panel gets damaged hence take care.

2. Power supply terminal

① In power supply, place the over current protection device and switch that conforms to the ratings of the setter, within 3m so that they are easily reachable.

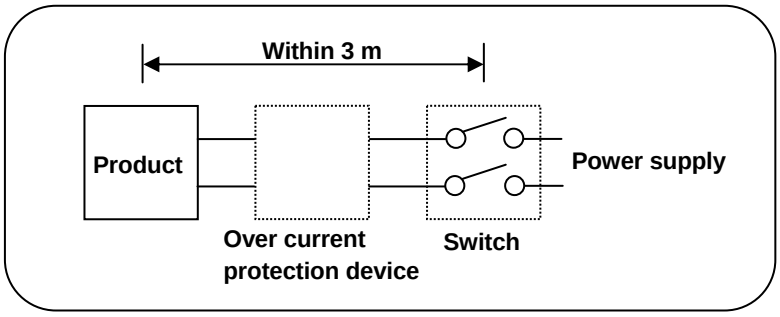


② Use a power supply with 600V vinyl insulation electric line (rating more than 1A AC) and an equal or greater electric line.

③ To avoid malfunctioning use good quality single phase power supply with little voltage change, wave form distortion and noise. If the noise is loud use noise filter and insert insulation transformer etc.

④ There is a little leakage of current flow in case of rated power supply hence take care. Leaking current is approximately 1mA.

| ⚠ Warning | To avoid serious accidents always cut off the power supply and then do the wiring. |
|---|---|

3. Output terminal

・Use the output terminal that is within the rating range. If a load that is out of range is connected, the setter may get out of order or its performance may deteriorate remarkably or it may malfunction.

4. Option terminal

・Use an option terminal that is within the rating range. If a load that is out of range is connected, the setter may get out of order or its performance may deteriorate remarkably or it may malfunction.

| | |
|---|---|
| ⚠Precaution | ① If a power supply that is out of rating range is connected, product may get out of order, its performance may show a remarkable deterioration or it may malfunction.<br>② If an excess current or excess voltage is applied to input output terminal of the setter, the setter may get out of order, its performance may show a remarkable deterioration or it may malfunction. |

**4-3-3. Example of wiring**

1. Example of wiring of external signal input

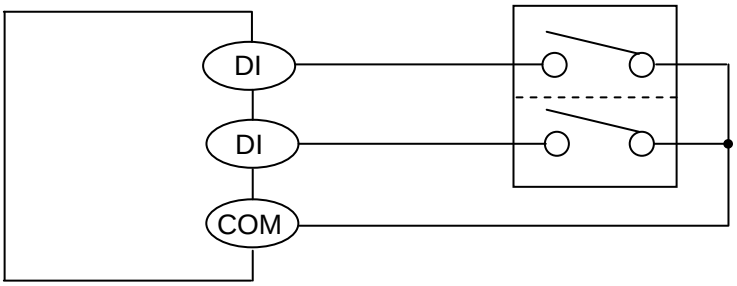


As shown in the figure on the left, the rating range of open collector signal is less than maximum current 50mA, DC load, maximum voltage. 24VDC.
Take care regarding the load capacity.

[Setter]

Various external signal inputs (DI) operate by short circuiting specified external signal input terminal and common (COM) terminal. Operation by switch and relay is a general method however operation by open collector output signal of peripheral device is also possible.

2. Wiring example of external signal output

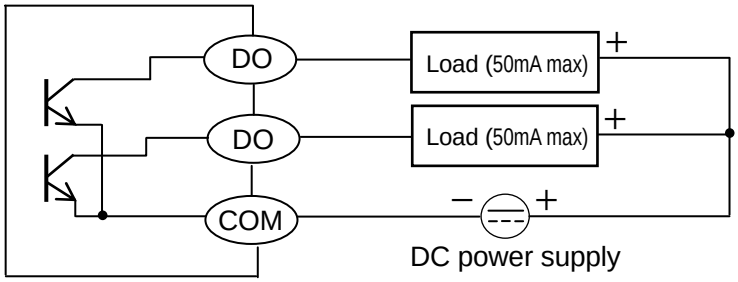


The rating range of open collector signal is less than maximum current 50mA,DC load, maximum voltage 24VDC.
Take care regarding the load capacity.

[Controller]

Various external signal outputs (DO) are output using open collector signals. If AC power supply is applied or load other than the rating range is applied, the controller may get out of order or its performance may deteriorate remarkably or it may malfunction.

In open collector signal if the load capacity is less, connect the load via buffer relay while referring to the following. In order to reduce noise always insert a contact protection device on the coil side of the buffer relay.

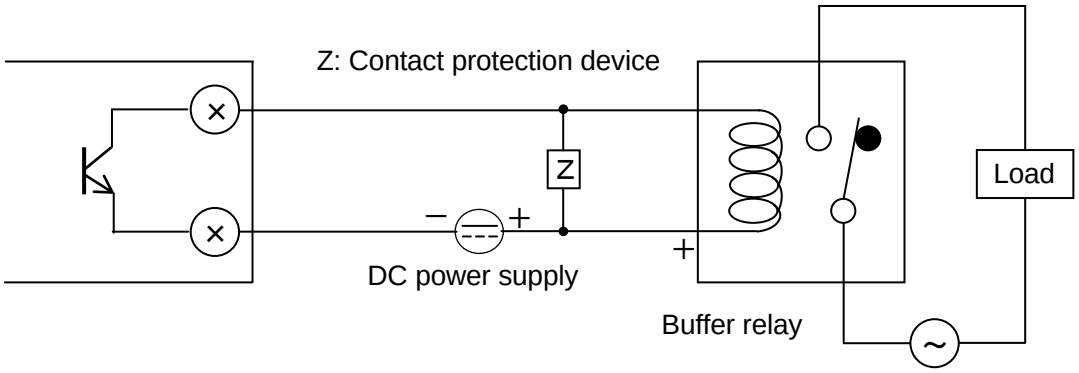


Contact protection device is handled in our company also (See 15. Accessories).
When power supply is an AC power supply and CR compound device and power supply have direct current, diode is generally used.

### 4-3-4. Precautions while wiring

| ⚠ Warning | In order to avoid accidents always read and understand these contents. |
|---|---|

**1. Wiring is done by professional**

Wiring is to be done by a person having actual experience and basic knowledge of instrumentation.

**2. Put the terminal cover**

In order to ensure safety, after the wiring is done, take measures so as to prevent direct contact with the terminal of the setter.
Exclusive terminal cover of the setter is available as accessory (Sold separately).

**3. Keep away from strong electric circuit and from noise source**

In order to prevent adverse effect due to noise, do not place the setter near a device from which noise is generated (magnet relay, motor, thyristor regulator, inverter etc.). Also avoid passing the wiring of the setter and that of noise generating devices through the same duct. Always keep the wiring away from each other. Take the necessary countermeasures against noise.

**4. Careful about connecting ground terminal**

Good grounding is important for reliability of the instrument. In most cases, it is better that each instrument is connected at a point. When connected separately, it is easy to get a bad effect due to noise. Check the connecting route.

**5. Keep away from heat generating sources**

In order to avoid bad effect due to high temperature, do not install the controller near heat generating sources. If the controller is kept near any heat generating source, measurement goes wrong and finally the life of the product is shortened. Take care about the surrounding temperature of the product.
Avoid places where there is wind and sudden temperature change, it also causes an error in measurement. Take necessary measures to avoid such surrounding environment.

**6. Unused terminal**

Do not connect anything to the unused terminal. Controller may get out of order.

**7. Countermeasures against erroneous output when power is supplied**

When power is supplied, sometimes the output related signal may be momentarily output when the controller is starting normally. Take the necessary countermeasures by using an external circuit.

# 5. Name of various parts

## 5-1. Entire overview

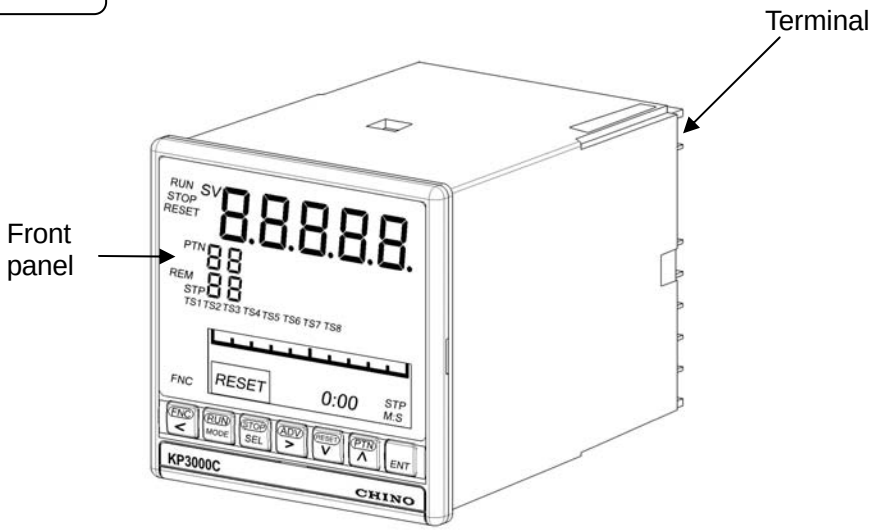


## 5-2. Overview of the front panel

⚠Precaution

This internal rack fixing screw is used at the time of maintenance.
Customers please do not touch it.

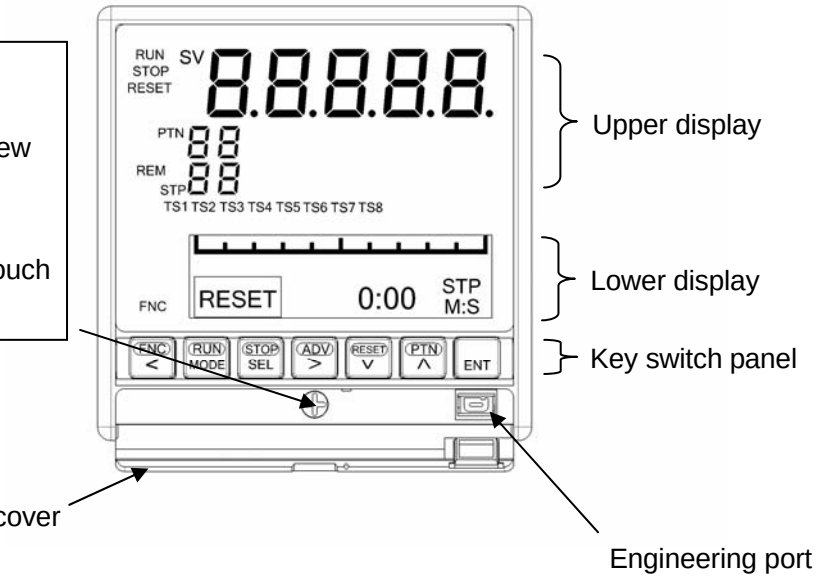


| Name | Function |
|---|---|
| Upper display | Displays SV and each status. |
| Lower display | Displays operation screen and settings screen. |
| Key switch panel | It is used for every setting. When power is supplied or any of the keys is clicked key back light (blue) illuminates (At the time of initial settings). When no key operation is done for approximately 30 seconds or more, the back light goes off automatically. This back light is illuminated till the end and brightness is uneven hence the blue color has a bright part. However it does not hinder the functionality of the product hence use it as it is. |
| Engineering port | Settings from PC can be done after connecting the exclusive engineering cable. |
| Lower cover | When using engineering port open the lower cover.<br>At other times keep it closed tightly. |

## 5-3. Details of the front panel

### 5-3-1.Upper display

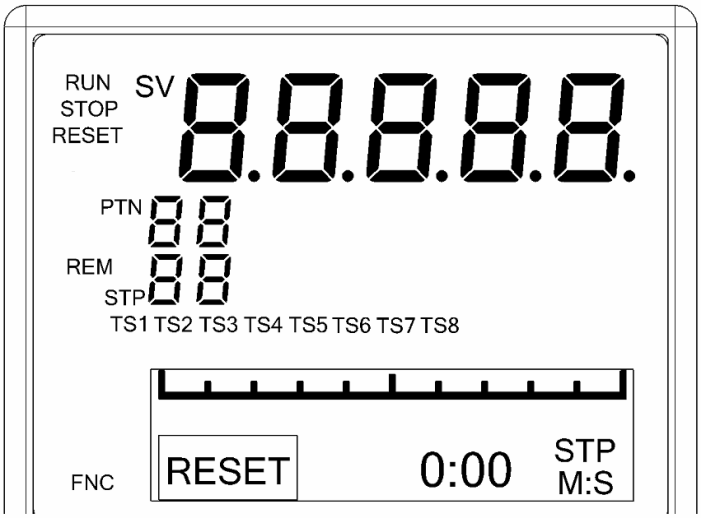


| Name | Function |
|---|---|
| SV | Displays SV (setting value). |
| PTN | Displays the pattern number that is being selected.<br>Blinks when PTN is changed. |
| STP | Displays the step number that is being executed. |
| RUN | Illuminates during RUN status.<br>Blinks during FAST status. |
| STOP | Illuminates during STOP status.<br>Blinks during WAIT status of external signal input. |
| REM | Illuminates during run operation done using external signal input.<br>(Illuminates only for the instrument with external signal input when select except 'MASTER KEY' in 'program drive system' of mode 1, or illuminates when select except ‘KEY’ in ‘program drive system’.) |
| TS1-TS8 | Illuminates when time signal from TS1 to TS8 is ON. |
| FNC | Illuminates when FNC key is clicked.<br>During illumination it is run operation key mode.<br>If FNC key is clicked again the illumination goes off.<br>The illumination may go off during run operation of external signal input or communication. |

### 5-3-2. Key switch panel

| Name | Function |
|---|---|
| FNC < | ・If it is clicked during run screen, it is run operation key mode.<br>(For example the status is run status when RUN MODE key is clicked after clicking the FNC < key.)<br>・When clicked during the setting screen, the mode becomes setting operation key mode and cursor moves backwards. |
| RUN MODE | ・In case of run operation key mode, it operates as RUN key.<br>(For example the status is run status when RUN MODE key is clicked after clicking the FNC < key.)<br>・When clicked during the setting screen, the mode becomes setting operation key mode and is used for switching the operation screen and mode screen of mode 0 and switching from setting screen to mode screen. |
| STOP SEL | ・In case of run operation key mode, it operates as STOP key.<br>(For example in the operation screen, if STOP SEL key is clicked after clicking the FNC < key, the status becomes STOP status.)<br>・When clicked during the operation screen, it is used for switching of operation screens. When clicked during the setting screen, the mode becomes setting operation key mode and is used for switching of settings screen. |
| ADV > | ・In case of run operation key mode, it operates as ADV key.<br>(For example, the operation becomes advance operation when in operation screen, ADV > key is clicked after clicking the FNC < key.)<br>・When clicked during the setting screen, the mode becomes setting operation key mode and is used for cursor forwarding or selecting a field. |
| RESET V | ・In case of run operation key mode, it operates as RESET key.<br>(For example in the operation screen, if RESET V key is clicked after clicking the FNC < key the status is RESET status.)<br>・When clicked during the setting screen, the mode becomes setting operation key mode and is used in descending order of setting value (setting field). |
| PTN ∧ | ・In case of run operation key mode, it operates as PTN key.<br>(For example in the operation screen, if PTN ∧ key is clicked after clicking the FNC < key during RESET, the status becomes pattern number selection status.)<br>・When clicked during the setting screen, the mode becomes setting operation key mode and is used in ascending order of setting value (or setting field) |
| ENT | ・It is used for registering the settings of the settings screen. |

# 6. Operation screen

Lower display displays operation screen and settings screen.
Operation screen becomes the time display screen that displays progress time of program pattern and a overall display screen.

## 6-1. Time display screen

| Time display screen | Description of screen |
|---|---|
| **[Elapsed time display]**<br> 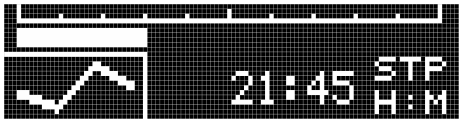 <br><br>**[Remaining time display]**<br> 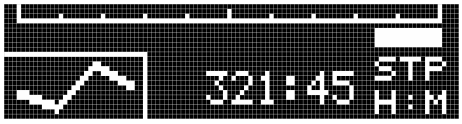 <br> | ① On the left bottom, a snap display of three steps, the executing step in the middle and its previous and the next step are displayed. In case of RUN status, the executing step in the middle blinks.<br>② On the upper side is the bar graph corresponding to the progress time of program pattern and on the lower right, that progress time is displayed digitally.<br>③ Progress time is selected from 4 types of options in 'time display system' of mode 1.<br>STP･･･Executing step display<br>PTN･･･Executing pattern display<br>Time format (H:M) is automatically changed/displayed depending on the length of time of pattern or step.<br>Time display system can also be changed by using ADV key. |

## 6-2 Program pattern overall display screen

| Time display screen | Description of screen |
|---|---|
| **[Condition of program RESET]**<br> 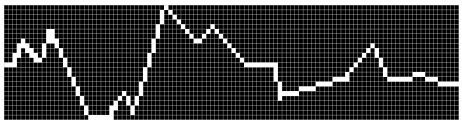 <br>**[Condition of program RUN]**<br> 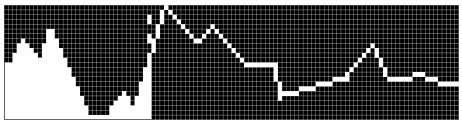 <br>**[Condition of program unsetting]**<br> 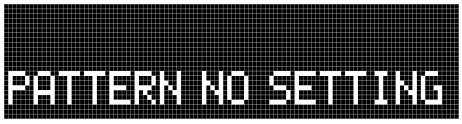 <br> | ① It is program pattern which is set at mode 2, and brief program pattern of selected setting number is displayed.<br>② When it is Run condition, blinking bar is displayed and the bar moves according to status.<br>③ If put in the STOP condition, bar is turned brink to light and stop when program is stopped.<br>④ Indicate horizontal axis is time and vertical axis is SV.<br>When program pattern is not set, display [PATTERN NO SETTING]. |

## 6-3. Operation screen and setting screen

Relation between operation screen and settings screen is as follows.

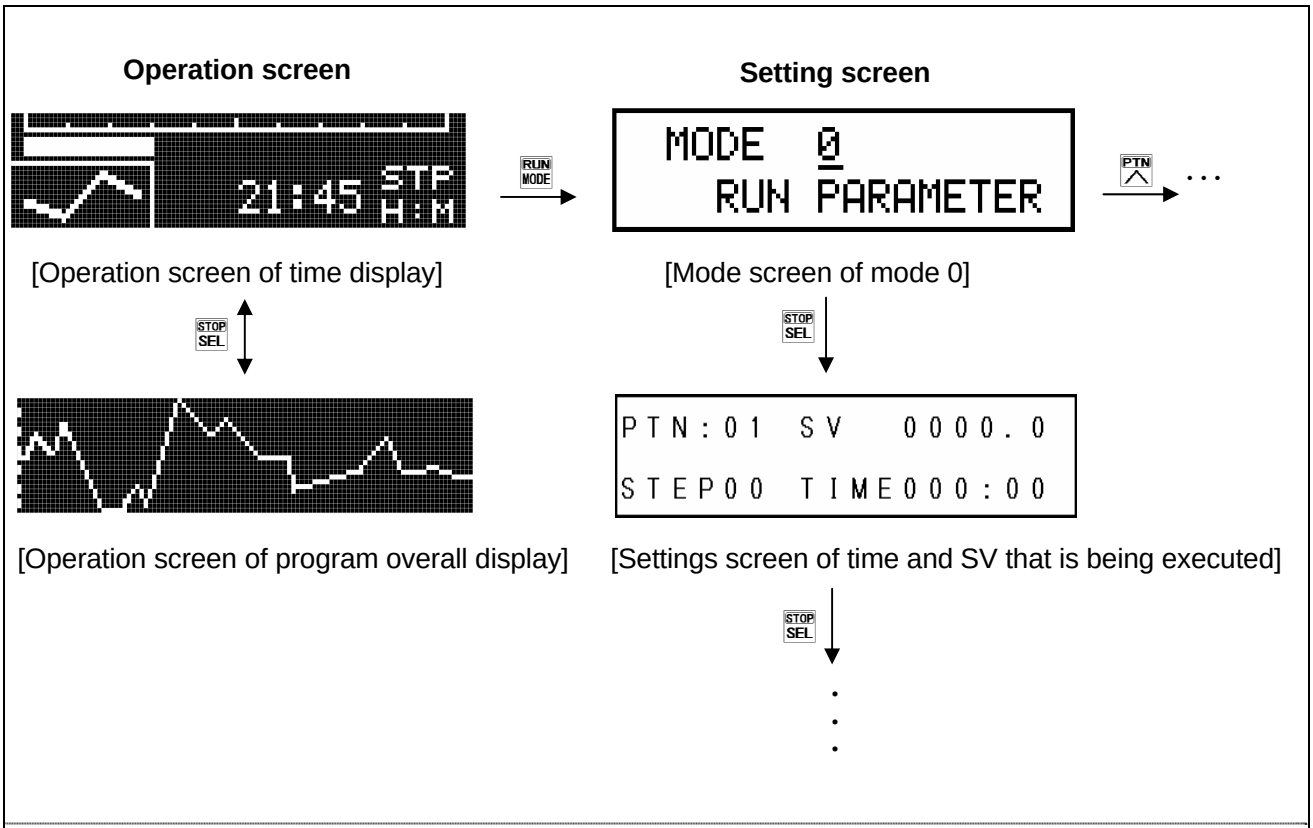


① When power is supplied and after initial message is displayed, the operation screen is displayed.
② In the settings screen, if keys are not operated for three minutes or more, it automatically returns to the operation screen.
③ Operation screen displayed lastly (either of time display screen, or program pattern overall display screen) is stored and that operation screen is displayed after returning from power supply insertion or settings screen.

# 7. Setting screen

## 7-1. Basics of setting

### 7-1-1. Call up the setting screen

① Setting screen is grouped for every mode as mentioned in '1.8 Parameter directory list table'. Confirm number and the mode of the settings screen that is to be called up.

② Switching between operation screen and mode screen is done by RUN MODE key, mode screen is selected by PTN RESET key and setting screen is selected by using STOP SEL key from mode screen respectively.

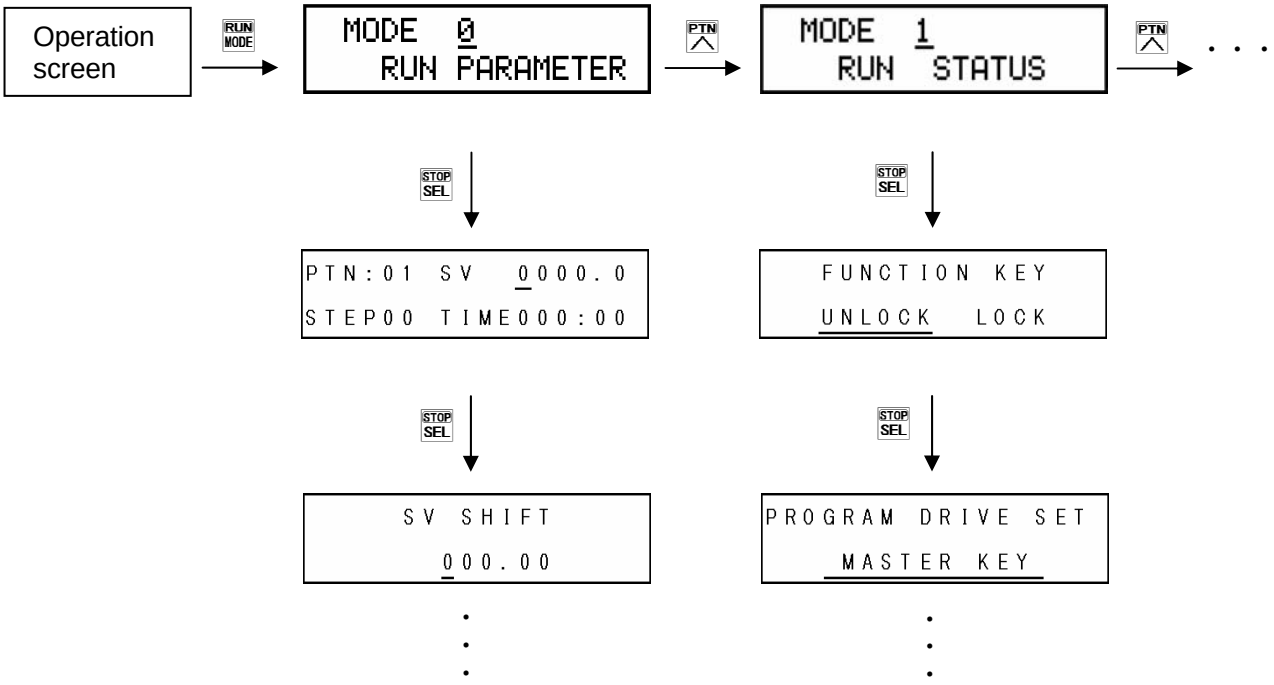

### 7-1-2. Basic operation of settings screen

In the settings screen, numeric value is changed and field is selected by using ADV・FNC・PTN・RESET key and settings are completed by clicking A/M ENT key.

| Example of basic operation | |
|---|---|
| 1. Example of setting a numeric value<br>PTN:01 SV 0000.0<br>STEP00 TIME000:00 | ① By using ADV・FNC key the cursor is moved to the digit whose numeric value is to be changed.<br>② By using PTN・RESET key the desired numeric value is selected. At that time, '?' mark is put.<br>③ The value is registered by using the ENT key. At that time '?' mark disappears. |
| 2. Example (1) of setting a field<br>PROGRAM DRIVE SET<br>MASTER KEY | ① By using PTN・RESET key the desired field is selected. At that time '?' mark is put.<br>② The field is registered by using the ENT key. At that time '?' mark disappears. |
| 3. Example (2) of setting a field<br>FUNCTION KEY<br>UNLOCK LOCK | ① By using ADV・FNC key the desired field is selected. At that time '?' mark is put.<br>② The field is registered by using the ENT key. At that time '?' mark disappears. |

A convenient key operation method is given below in order to speed up the settings operation more.

1. Fast forwarding the cursor

① Usually, cursor moves by one digit by using ADV key, however by using the ENT key, the cursor can be moved by, set field unit.

② For example in the following pattern settings screen, when ENT key is clicked, the cursor moves as shown below.

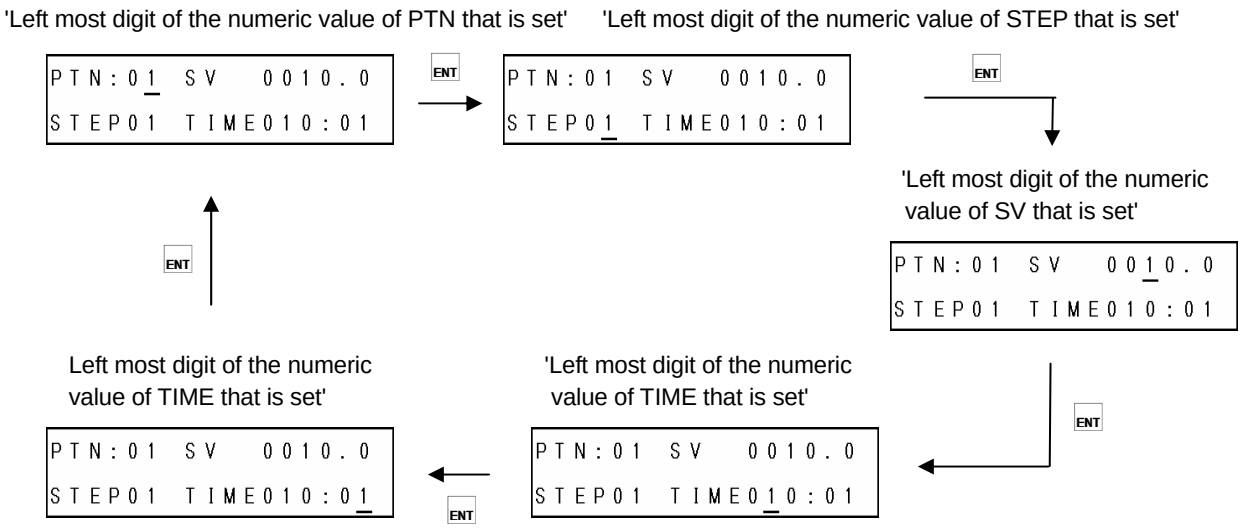


2. Rewinding the cursor

Usually by using the ADV key, the cursor moves by one digit from left to right, however by clicking the FNC key, the cursor can be moved from right to left.

## 7-2. Mode 0

Mode 0 changes the setting of main parameters that are being executed.

| Settings screen | Description of the screen |
|---|---|
| 1. Mode screen<br><br>MODE 0<br>RUN PARAMETER<br><br>[Lock status]<br><br>MODE 0 Lock<br>RUN PARAMETER<br><br>[Display OFF status]<br><br>MODE 0 NoDisp<br>RUN PARAMETER | ① Mode 0 screen.<br><br>② By clicking the ADV>·FNC< key, 'Lock' and 'NoDisp' is displayed.<br><br>③ For mode 0 settings screen, if setting change is to be prohibited select 'Lock' .<br>④ When doing the settings by communications, set all the mode screens to 'Lock'.<br><br>⑤ When settings screen of mode 0 is not displayed, 'NoDisp' is displayed. |
| 2. SV that is being executed and time<br><br>PTN:01 SV 0000.0<br>STEP00 TIME000:00 | ① SV of the executing step and the time can be changed.<br>② SV setting range is within the SV scope.<br>③ Change in the setting of this screen is not reflected in the setting contents of 'Program pattern' of mode 2 and is a change only for that time. |
| 3. SV correction<br><br>SV SHIFT<br>000.00 | ① Sets SV correction (SV bias).<br>② It is a function that enables shifting of entire SV without changing the settings of the program pattern when you want to shift executing SV a little and not just the setting of program pattern is changed. This setting value is not only valid when SV correction is in executing step, but is always valid. Hence take care.<br>③ When SV decimal point, SV scale etc. is changed, sometimes decimal point position changes automatically and relatively hence take care. |

## 7-3. Mode 1

Mode 1 performs the setting related to run status.

| Settings screen | Description of the screen |
|---|---|
| 1. Mode screen<br><br>MODE 1<br>RUN STATUS<br><br>[Lock Status]<br><br>MODE 1 Lock<br>RUN STATUS<br><br>[Display OFF Status]<br><br>MODE 1 NoDisp<br>RUN STATUS | ① Mode 1 screen.<br><br>② By clicking the ADV>·FNC< key, 'Lock' and 'NoDisp' is displayed.<br><br>③ For mode 1 settings screen, if setting change is to be prohibited select 'Lock'.<br>④ When doing the settings by communications, set all the mode screens to 'Lock'.<br><br>⑤ When settings screen of mode 1 is not displayed, 'NoDisp' is displayed. |
| 2. Run operation key lock<br><br>FUNCTION KEY<br>UNLOCK LOCK | ① Run operation key can be locked.<br>② If 'UNLOCK' is selected, lock is released and FNC< key becomes enabled and run operation can be done by key.<br>③ If 'LOCK' is selected, lock status, FNC< key is disabled and run operation cannot be done by key. |
| 3. Program drive system<br><br>PROGRAM DRIVE SET<br>MASTER KEY | ① Only the specifications with external signal input (DI) or specifications with communication are displayed.<br>② Set program drive system.<br>③ If 'MASTER KEY' is selected, driving is done by front key.<br>④ If 'MASTER EXT' is selected, driving is done by external drive input, however, it can be selected only for specifications with external signal input.<br>⑤ If 'MASTER FREE' is selected, driving can be done by any of front key, external signal input and communication. However, it can be selected only for specifications with external signal input or specifications with communications. At that time any of the last drive operation, becomes the latest drive status , however last drive system type cannot be judged from external appearance hence take care.<br>⑥ If 'SLAVE EXT' is selected, driving is done by external signal input that is synchronized with the others. However, it can be selected only for specifications with external signal input.<br>⑦ If 'MASTER COM' is selected, driving is done by communication. However it can be selected only for specifications with communication. |

| | |
|---|---|
| 4. Pattern selection system<br><br>PATTERN SELECT<br>KEY EXT COM FREE | ① Only the specifications with external signal input or with communication are displayed.<br>② Pattern selection system is set.<br>③ If 'KEY' is selected, selection is done using front key.<br>④ If 'EXT' is selected, selection is done using external signal input. However it can be selected only for specifications with external signal input.<br>⑤ If 'COM' is selected, selection is done using communication. However only the specifications with communication can be selected.<br>⑥ If 'FREE' is selected, selection can be done from front key or external signal input or communication. However it can be selected only for specifications with external signal input or specifications with communication. At that time any of the last selection operation, becomes the latest selection number, however last selection system type cannot be judged from external appearance hence take care. |
| 5. Time display system<br><br>TIME DISPLAY SET<br>PASS STEP | ① Sets the time display system of operation screen (Time display).<br>② If 'PASS STEP' is selected, elapsed time of the executing step is displayed.<br>③ If 'PASS PATTERN' is selected, elapsed time of executing pattern is displayed.<br>④ If 'REMAIN STEP' is selected, remaining time of the executing step is displayed.<br>⑤ If 'REMAIN PATTERN' is selected, remaining time of executing pattern is displayed.<br>⑥ In the time display screen, time display system can also be changed by ADV key. |
| 6. Operation when power supply is started<br><br>POWER ON ACTION<br>CONTINUE RESET | ① Set the operation status when starting a power supply.<br>② If 'CONTINUE' is selected, the status is that before the power supply cut off.<br>③ If 'RESET' is selected, the status is RESET status.<br>④ When RESET is selected and power supply is started, even though the setting screen, external signal input and communication select RUN status, the status is RESET, hence take care. In that case, by returning to RUN again, the status becomes 'RUN'. |

## 7-4. Mode 2

Mode 2 performs the setting related to program pattern.

| Settings screen | Description of the screen |
|---|---|
| 1. Mode screen<br><br>MODE 2<br>PATTERN / STEP<br><br>[Lock Status]<br><br>MODE 2 Lock<br>PATTERN / STEP<br><br>[Display OFF Status]<br><br>MODE 2 NoDisp<br>PATTERN / STEP | ① Mode 2 screen.<br><br>② By clicking the ADV・FNC key, 'Lock' and 'NoDisp' is displayed.<br><br>③ For mode 2 settings screen, if setting change is to be prohibited select 'Lock'.<br>④ When doing the settings by communications set all the mode screens to 'Lock'.<br><br>⑤ When settings screen of mode 2 is not to be displayed, select 'NoDisp'. |
| 2. Program pattern<br><br>PTN:01 SV 0000.0<br>STEP00 | ① Set the time and SV which is the basis of program pattern.<br>② 'PTN' indicates (program) pattern, pattern numbers from 01 to 30 can be set. Select an arbitrary number and set the pattern.<br>③ 'STEP' indicates step and maximum 19 steps can be set for each pattern.<br>④ Set a standard SV, such that 'SV' finally reaches that step.<br>When SV decimal point, SV scale etc. is changed, sometimes decimal point position changes automatically and relatively hence take care.<br>⑤ 'TIME' sets the time required for that step. Unit can be set in 'time unit' of mode 2, either of 'Hours:Minutes' or 'Minutes:Seconds' can be selected.<br>⑥ Setting procedure is as follows.<br>・Select pattern number.<br>・Set setting value of start SV in 'SV' in step number 00.<br>・Consider step number 01 and set SV and time of the initial step. Setting range of SV is within the setting scope.<br>Setting range of TIME is within the range '000:00' to '999:59'. By setting '000:00', SV that is set momentarily (step wise) can also be considered.<br>・Similarly for next step onwards, set SV and TIME and combine it with the desired program pattern.<br>・This setting procedure becomes a system called standard SV system that exists in standard specifications.<br>In option, there is a thing called slope SV system. In case of this system, set in 'SV' the SV variation for each unit time and set the time in 'TIME' until which that SV variation can continue. |

| | |
|---|---|
| | ·Combine with the desired program pattern and when you want to exit the setting, set 'END/LINK00' in TIME of last step number and thus end the pattern setting. In the initial setting status 'END/LINK00' is always set in the last step.<br>·When you want to link (link another pattern) a pattern, set the pattern number that is to be linked, in '00' on the right of LINK of 'END/LINK00'of the last step. When link several patterns and link form end pattern to first pattern, or set one of the pattern linked itself, become endless (endless loop). Then pattern repeat is not effected.<br>·If you want to delete a certain step, set 'STEPDELETE' in TIME of step number that is to be deleted. The contents of that step get deleted and the step numbers from next step onwards are automatically updated.<br>·If you want to insert a certain step, set 'STEPINSERT' in TIME of step number that is to be inserted. The contents which is same as each parameter of selected step get inserted and the step numbers from next step onwards are automatically updated. |
| 3. Repeat step<br> <br> | ① Set repeat step.<br>② It is a convenient function if you want to repeat a specific step section in an identical pattern.<br>③ Set '00' in REPEAT of start repeat step number and set 'repeat count' in REPEAT of end repeat step number. If '01' is set, the step repeat section that is set is repeated once, hence the entire identical repeat step section is run twice.<br>④ In identical pattern, step repeat settings can be done any number of times. However duplication of repeat section and, small repetitions within large repetitions cannot be set.<br>When setting a number of sets of repeat step, set in such a way that the '00' and repeat count settings always pair alternately in the pattern.<br>⑤ On the upper right part of this setting screen, snap format of step that is being set is displayed. |
| 4. SV No.<br> <br> | ① It is displayed when digital output specifications or communication specifications and communication protocol 'Modbus' is selected.<br>② Set the SV number for every pattern/step that is set.<br>③ It is set from numbers 1 to 8. Number 0 can also be set. In that case the function continues with the number same as the number of the previous step. |
| 5. Time signal number<br> 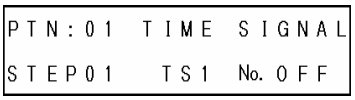 <br> | ① Only the specifications with external signal output (DO) are displayed.<br>② For every pattern/step that is set, time signal output destination and time signal number to be used is set.<br>③ Set time signal output destination in 'TS' and time signal number in 'No.'.<br>④ Set time signal number from number 1 to 8, number 1R-8R, ON and OFF. The 'R' after number is for repeating the time signal and only during that step, is a function where in time signal of that number repeats with identical setting value. 'ON' means everything ON and 'OFF' means everything OFF. |

| | |
|---|---|
| 6. SV range<br><br>SV LIMIT<br>L 0000.0 H 2000.0 | ① Set SV setting range.<br>② Setting range is within the output signal range.<br>③ When SV decimal point, SV scale etc. is changed sometimes, automatically and relatively, the setting range and decimal point position may change or initialization takes place, hence take care. |
| 7. Pattern repeat<br><br>PATTERN REPEAT<br>0000 | ① Set pattern repeat (repeat).<br>② It is a very convenient function, if you want to repeat the program pattern of same pattern number.<br>③ When '0001' is set, same pattern is repeated once. Hence on a whole, the same pattern is run twice. 'Pattern repeat' is not only applicable to the executing pattern, but this set value is always enabled, hence take care. |
| 8. Pattern clear<br><br>PATTERN CLEAR<br>END EACH:01 ALL | ① It is a function that clears (deletes) the pattern that is set.<br>② When clearing the specified pattern number, set the pattern number that is to be cleared on the right side of 'EACH:' and click the ENT key.<br>③ When clearing all the pattern numbers that are set, move the cursor to 'ALL' and click the ENT key.<br>④ When flashing is clear by clicking ENT key for while, and cursor retune to “END”, clear (delete) is executed.<br>⑤ Executing pattern cannot be cleared.<br>⑥ Cleared pattern number cannot be restored, hence take care. |
| 9. Pattern copy<br><br>PATTERN COPY<br>END PTN:01→02 YES | ① It is a function of copying the optional pattern number that is set, in pattern number which is not set.<br>② Set the pattern number of copy source on the left side and pattern number of copy destination on the right side of '→', move the cursor to 'YES' and click ENT key.<br>③ Copy function cannot be performed on the pattern number that is set, hence if you want to copy on the pattern number that is already set, clear that pattern and then copy. |
| 10. SV at the time of resetting<br><br>PROGRAM RESET SV<br>0000.0 | ① It is displayed in case of specifications with analog output, specification with digital output, or specifications with communication and when selecting [TRANS].<br>② Sets the SV at the time of resetting.<br>③ When selecting 'SV' by transmission type, the transmission value at the time of resetting becomes this setting value. |
| 11. Time unit<br><br>PROGRAM TIME UNIT<br>HOUR:MIN MIN:SEC | ① Set a common time unit related to program pattern and time signal.<br>② If 'HOUR:MIN' is selected it becomes 'HOUR:MIN'.<br>③ If 'MIN:SEC' is selected, it becomes 'MIN:SEC.<br>④ This setting cannot be changed when the program is running. |

## 7-5. Mode 5

Mode 5 performs the setting related to SV.

| Settings screen | Description of the screen |
|---|---|
| 1. Mode screen<br><br>MODE 5<br>SV SET<br><br>[Lock Status]<br><br>MODE 5 Lock<br>SV SET<br><br>[Display OFF Status]<br><br>MODE 5 NoDisp<br>SV SET | ① Mode 5 screen.<br><br>② By clicking the ADV・FNC key, 'Lock' and 'NoDisp' is displayed.<br><br>③ For mode 5 settings screen, if setting change is to be prohibited select 'Lock'.<br>④ When doing the settings by communications, set all the mode screens to 'Lock'.<br><br>⑤ When settings screen of mode 5 is not displayed, select 'NoDisp'. |
| 2. SV decimal point<br><br>SV DOT<br>1 | ① Sets the decimal point position of SV.<br>② Based on the decimal point position that is set, up to five digits including the integer part are displayed. Hence only if the number of digits of integer is less, more number of digits after the decimal point can be displayed within the range of decimal point position that is set. |
| 3. SV scale<br><br>SV SCALE<br>0000.0 ～ 2000.0 | ① It is displayed at the time of analog output specifications.<br>② Range of SV is set depending on the output signal range.<br>③ When SV decimal point is changed, sometimes the decimal point position may change or may be initialized automatically and relatively hence take care. |
| 4. SV decimal point for displaying<br><br>SV DISPLAY DOT<br>1 | ① Set the decimal point position of SV which is displayed at the upper display.<br>② Based on the decimal point position that is set, up to five digits including the integer part are displayed. Hence only if the number of digits of integer is less, more number of digits after the decimal point can be displayed within the range of decimal point position that is set.<br>③ When SV scale etc. is changed, setting range and decimal point position may change automatically hence take care. |

## 7-6. Mode 6

Mode 6 performs the setting related to time event.
Following screens are displayed, only the instrument with time signal specifications.

| Settings screen | Description of the screen |
|---|---|
| 1. Mode screen<br>MODE 6<br>TIME EVENT<br>[Lock status]<br>MODE 6 Lock<br>TIME EVENT<br>[Display OFF status]<br>MODE 6 NoDisp<br>TIME EVENT | ① Mode 6 screen.<br>② By clicking the ADV・FNC key, 'Lock' and 'NoDisp' is displayed.<br>③ For mode 6 settings screen, if setting change is to be prohibited select 'Lock'.<br>④ When doing the settings by communications, set all the mode screens to 'Lock'.<br>⑤ When settings screen of mode 6 is not displayed, select 'NoDisp'. |
| 2. Time signal<br>8 types<br>TIME SIG ON000:00<br>No. 1 OFF001:00 | ① The screen is displayed only the instrument with external signal output (DO) specifications.<br>② Set 8 types of time signal.<br>③ Set time from the time of starting the step to switching the time signal ON, in 'ON', and set the time from the time of switching the time signal ON to switching it OFF in 'OFF'.<br> 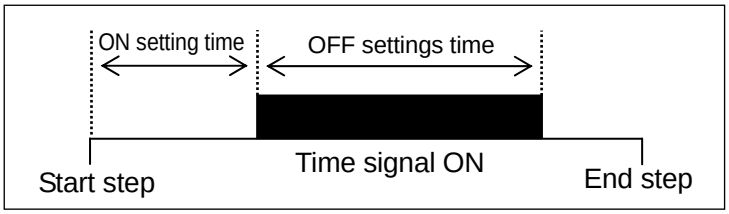 <br><br>③ Set the unit in 'time unit' of mode 2.<br>⑤ After the settings, it is necessary to set the time signal number that is to be used for each pattern/step in mode 2. |

## 7-7. Mode 8

Mode 8 performs settings related to communications.

| Settings screen | Description of the screen |
|---|---|
| 1. Mode screen<br>MODE 8<br>COMMUNICATION<br>[Lock status]<br>MODE 8 Lock<br>COMMUNICATION<br>[Display OFF status]<br>MODE 8 NoDisp<br>COMMUNICATION | ① Mode 8 screen. Only the instrument with communications is displayed.<br>② By clicking the ADV・FNC key, 'Lock' and 'NoDisp' is displayed.<br>③ For mode 8 settings screen, if setting change is to be prohibited select 'Lock'.<br>④ When doing the settings by communications, set all the mode screens to 'Lock'.<br>⑤ When settings screen of mode 8 is not displayed, select 'NoDisp'. |
| 2. Communications speed<br>COM BIT RATE<br>9600 bps<br>[Communications 2 port specifications]<br>COM1 BIT RATE<br>9600 bps | ① Only the instrument with communications is displayed.<br>② Set the communications speed.<br>③ In case of communications 2 port specifications, this setting screen becomes the communications speed for COM1.<br>④ When the instrument has digital output and communications specification, this setting screen becomes communications speed for communications.<br>However, when select combination that digital output is ‘RS485’ and communications specifications is ‘RS422A’, this screen becomes communications speed for digital output. |
| 3. Instrument number<br>COM NUNBER<br>01<br>[Communications 2 port specifications]<br>COM1 NUNBER<br>01 | ① Only the instrument with communications is displayed.<br>② Set the instrument number.<br>③ In case of communications 2 port specifications, this setting screen becomes the instrument number for COM1.<br>④ When the instrument has digital output and communications specification, this setting screen becomes Instrument number for communications. |

| | |
|---|---|
| 4. Communications function<br><br>COM KIND<br>COM TRANS<br><br>[Communications 2 port specifications]<br><br>COM1 KIND<br>COM TRANS | ① Only the instrument with communications is displayed.<br>② Set the communications function.<br>③ If 'COM' is selected it is higher order communications function.<br>④ If 'TRANS' is selected, it is communications transmission function.<br>⑤ In case of communications 2 port specifications, this setting screen becomes the communications function for COM1.<br>⑥ When the instrument has digital output and communications specification, this setting screen becomes communications function for communications. |
| 5. Communications protocol<br><br>COM PROTOCOL<br>MODBUS( RTU )<br><br>[Communications 2 port specifications]<br><br>COM1 PROTOCOL<br>MODBUS( RTU ) | ① Only the instrument with communications are displayed.<br>② Set communications protocol.<br>③ If 'MODBUS (RTU)' is selected, MODBUS (RTU) is displayed.<br>④ If 'MODBUS (ASCII)' is selected, MODBUS (ASCII) is displayed.<br>⑤ If 'PRIVATE' is selected, usual CHINO protocol is displayed.<br>⑥ In case of communications 2 port specifications, this setting screen becomes the communications protocol for COM1.<br>⑦ When the instrument has digital output and communications specification, this setting screen becomes communications protocol for communications.<br>However, when select combination that digital output is ‘RS485’ and communications specifications is ‘RS422A’, this screen becomes communications protocol for digital output. |
| 6. Communications character<br><br>COM CHARCTER<br>8BIT/NON /STOP1<br><br>[Communications 2 port specifications]<br><br>COM1 CHARCTER<br>8BIT/NON /STOP1 | ① It only displays with the instrument with communications and communication protocol, when 'MODBUS' is selected.<br>② Set communications character (bit length, parity, stop bit).<br>③ In case of communications 2 port specifications, this setting screen becomes the communications character for COM1.<br>④ When the instrument has digital output and communications specification, this setting screen becomes communications character for communications.<br>However, when select combination that digital output is ‘RS485’ and communications specifications is ‘RS422A’, this screen becomes communications character for digital output. |
| 7. Selecting communications 2 port function<br><br>COM2 PORT SELECT<br>COM ENG | ① Only the instrument with communications 2 port or digital output specifications is displayed.<br>② Set the function of communications 2 port.<br>③ If 'COM' is selected 2 port communications is possible from the rear terminal.<br>④ If 'ENG' is selected 1 port communications is possible from the rear terminal and engineering port communications that exists in the front is possible.<br>⑤ Initial value is the following.<br>Digital output specifications :ENG<br>Communications 2 port specifications :COM<br>However, when select combination that digital output is ‘RS485’ and communications specifications is ‘RS422A’, initial value becomes ‘COM’. |

| | |
|---|---|
| 8. Communications speed for COM2<br><br>COM2 BIT RATE<br>9600 bps | ① In communication 2 port or digital output specifications, communications 2 port function selection is displayed only when 'COM' is selected.<br>② When the instrument has communications 2 port specifications, set the communication speed for COM2.<br>③ When the instrument has digital output specifications, set the communication speed for digital output.<br>However, when select combination that digital output is ‘RS485’ and communications specifications is ‘RS422A’, this screen becomes communications speed for communications. |
| 9. Instrument number for COM2<br><br>COM2 NUMBER<br>01 | ① In communications 2 port or digital output with communications specifications, this screen is displayed when ‘RS485’ in digital output/’RS422A’ in communication is selected and 'COM' in communications 2 port is selected.<br>② When the instrument has communications 2 port specifications, set the instrument number for COM2.<br>③ When select combination that digital output is ‘RS485’ and communications specifications is ‘RS422A’ in digital output with communications specifications, this screen becomes instrument number for communications. |
| 10. Communications function for COM2<br><br>COM2 KIND<br>COM TRANS | ① In communications 2 port or digital output with communications specifications, this screen is displayed when ‘RS485’ in digital output/’RS422A’ in communication is selected and 'COM' in communications 2 port is selected.<br>② When the instrument has communications 2 port specifications, set the communications function for COM2.<br>③ When select combination that digital output is ‘RS485’ and communications specifications is ‘RS422A’ in digital output with communications specifications, this screen becomes communications function for communications.<br>④ If 'COM' is selected it becomes high order communication function.<br>⑤ If 'TRANS' is selected it becomes communication transmission function. |
| 11. Communications protocol for COM2<br><br>COM2 PROTOCOL<br>MODBUS( RTU ) | ① In communications 2 port or digital output specifications, communications 2 port function selection is displayed only when 'COM' is selected.<br>② When the instrument has communications 2 port specifications, set the communications protocol for COM2.<br>③ When the instrument has digital output specifications, set the communications protocol for digital output.<br>However, when select combination that digital output is ‘RS485’ and communications specifications is ‘RS422A’, this screen becomes communications protocol for communications.<br>④ If 'MODBUS (RTU)' is selected, MODBUS (RTU) is displayed.<br>⑤ If 'MODBUS (ASCII)' is selected, MODBUS (ASCII) is displayed.<br>⑥ If 'PRIVATE' is selected, usual CHINO protocol is displayed. |
| 12. Communications character for COM2<br><br>COM2 CHARCTER<br>8BIT/NON /STOP1 | ① In communications 2 port or digital output specifications, communications protocol for COM2 is displayed only when 'MODBUS' is selected.<br>② In case of communications 2 port specifications, set the communications character (bit length/parity/stop bit) for COM2.<br>③ When the instrument has digital output specifications, set the communications protocol for digital output.<br>However, when select combination that digital output is ‘RS485’ and communications specifications is ‘RS422A’, this screen becomes communications character (bit length/parity/stop bit) for communications. |

## 7-8. Mode 11

Mode 11 performs the setting related to system (Initial settings of the system).

| Settings screen | Description of the screen |
|---|---|
| 1. Mode screen<br><br>MODE 11<br>SYSTEM 1<br><br>[Lock Status]<br><br>MODE 11 Lock<br>SYSTEM 1<br><br>[Display OFF status]<br><br>MODE 11 NoDisp<br>SYSTEM 1 | ① Mode 11 screen.<br><br>② By clicking the ADV・FNC key, 'Lock' and 'NoDisp' is displayed.<br><br>③ For mode 11 settings screen, if setting change is to be prohibited select 'Lock'.<br>④ When doing the settings by communications, set all the mode screens to 'Lock'.<br><br>⑤ When settings screen of mode 11 is not displayed, select 'NoDisp'. |
| 2. Display back light<br><br>DISPLAY BACK LIGHT<br>GREEN ORANGE AUTO | ① Set the back light color of lower display.<br>② If 'GREEN' is selected, usually green color is displayed.<br>③ If 'ORANGE' is selected, usually orange color is displayed.<br>④ If 'AUTO' is selected, usually green color is displayed however under the following conditions, orange color is displayed.<br>・When an error message is displayed.<br>By valid use of this function, (Normal/Abnormal) can be judged at a glance. |
| 3. Display contrast<br><br>DISPLAY VIEW ANGLE<br>050% | ① It adjusts the contrast of LCD (Liquid crystal display) of lower display.<br>② Adjust and set the LCD such that the characters are clearly visible. 40 to 70% of rage is suitable for setting value. When set the range over or under, stripes appear in the LCD. Do not change the setting (initial value 50%) in ordinary use.<br>③ Contrast especially affects the surrounding temperature hence do this adjustment approximately one hour after switching on the power supply and after the surrounding temperature becomes stable. |
| 4. Key back light<br><br>KEY BACK LIGHT<br>AUTO OFF ON | ① It sets the illumination/non-illumination function of key backlight.<br>② If 'AUTO' is selected, the following operation takes place.<br>・Usually it is non-illuminated, however when power is supplied or if any of the key is pressed, it illuminates and gets switched off if no key operation is done for approximately 30 seconds.<br>③ If 'OFF' is selected, it usually gets switched OFF.<br>④ If 'ON' is selected, it usually illuminates. |

| | |
|---|---|
| 5.External signal layout<br><br>TERMINAL No. 12<br>DI RUN/STOP | ① Only the specifications with external signal input or specifications with external signal output are displayed.<br>② In external signal input (DI) and external signal output (DO), a function for terminal number is allotted.<br>③ In 'TERMINAL No.' terminal number having external signal input (DI) or external signal output (DO) function is displayed hence set the terminal number (No.) and the function corresponding to it.<br>④ External signal input (DI) function is as follows.<br>・'RUN/STOP' : Program drive. Runs when OFF, stops when OFF.<br>・'ADV' : Program drive. Advances from ON (momentary signal) to OFF.<br>・'RESET' : Program drive. Resets when ON (momentary signal).<br>・'WAIT' : Program drive. Waits when ON.<br>・'FAST' : Program drive. Speeds up when ON.<br>・'PTN 1' : Select pattern. BCD code is '1' when ON.<br>・'PTN 2' : Select pattern. BCD code is '2' when ON.<br>・'PTN 4' : Select pattern. BCD code is '4' when ON.<br>・'PTN 8' : Select pattern. BCD code is '8' when ON.<br>・'PTN10' : Select pattern. BCD code is '10' when ON.<br>・'PTN20' : Select pattern. BCD code is '20' when ON.<br>⑤ External signal output (DO) function is as follows.<br>・From 'TS1' : Time signal. From time signal 1.<br>・To 'TS8' : Time signal. To time signal 8.<br>・'RUN/STOP' : Status. Runs when ON and stops when OFF.<br>・'ADV' : Status. Advances when ON (Momentary signal).<br>・'RESET' : Status. Resets when ON.<br>・'WAIT' : Status. Waits when ON.<br>・'END' : Status. Ends when ON.<br>⑥ No setting condition '－－－－－' is displayed when shipped form factory. If set any function once, not setting condition is not displayed.<br>⑦ Allotted setting is not initialized even if setting content is initialized. |
| 6. Time signal output testing<br><br>TIME SIGNAL CHECK<br>TS No. 0 (0=NON) | ① Displays only the instrument with external signal output (DO).<br>② It is a testing function of time signal output.<br>③ When this setting screen is displayed, current activation status of maximum 8 point time signal output become OFF automatically. When select the time signal which make put in output status and click the ENT key, become output status until selecting No.0 (NON). Using this function effectively facilitates system checking of final product.<br>④ When this screen is removed, time signal output automatically returns to present activation status.<br>⑤ If do not allocate external signal, corresponded TS1 to 8 of upper display are lighted in this function. |

| | |
|---|---|
| 7. Checking status output<br><br>STATUS OUT CHECK<br>OFF | ① Displays only the instrument with external signal output (DO).<br>② Check function of status output.<br>③ When this setting screen is displayed, current activation status of maximum 5 point status become OFF automatically. When select the status which make put in output status and click the ENT key, become output status until selecting OFF.<br>④ When this screen is removed, status output automatically returns to current activation status.<br>⑤ This function is effective only in the status output operation, and program operation status and operation of display contents are not changed. |

| | |
|---|---|
| ⚠ Precaution | All outputs are turned OFF. When it is troubled by becoming OFF, click the mode key, and remove from the alarm checking status output screen. |

## 7-9. Initializing the setup parameter

If set contents are to be returned to initial value, you can do it by the following procedure. There are two types of initializations and you can select from them. Once initialization is executed, you will not be able to return to the original setting contents hence take care.

| Initialization type | Procedure | Screen that is being initialized |
|---|---|---|
| 1.Initializing the basic setting contents<br>(Mode 0 to Mode 11)<br><br>※ However program pattern is not initialized. | ① Cut off the power supply.<br>② Switch on the power supply while clicking the RUN MODE key.<br>③ After confirming that the screen shown on the right is displayed, release the MODE key.<br>④ After the initialization is done, operation screen is displayed. | Parameter<br>Initialize |
| 2. Initializing all the setting contents<br>(Mode 0 to Mode 11)<br><br>※ Program pattern is also initialized. | ① Cut off the power supply.<br>② Switch on the power supply while pressing the RUN MODE key and ENT key.<br>③ After confirming that the screen shown on the right is displayed, release the RUN MODE key and ENT key.<br>④ After the initialization is done, operation screen is displayed. | All Parameter<br>Initialize |

* ‘External signal allocation‘ is not initialized.

| | |
|---|---|
| ⚠ Precaution | When time signal output testing and checking status output are displayed, present status of outputs is turned OFF. When it is troubled by becoming OFF, click the mode key, and remove from the setting screen or set the ‘NoDisp’ in the mode screen. |

## 7-10. Precautions while setting

| Precautions | Explanation |
|---|---|
| 1. Precautions regarding the setting range. | ・In numeric value settings parameter, there exists a range of numeric values that can be set, hence take care.<br>・If you try to set a numeric value exceeding the numeric value range that can be set, an error message is displayed. When an error message is displayed confirm the contents of the error message and do the proper settings. |
| 2. When a setting is changed, sometimes the set contents of other settings screen change. | ・If the setting of important key parameters is changed, the decimal point position or the setting range of the set value of other related settings screen may sometimes change or may be initialized.<br>・For example if 'SV decimal point', 'SV scale' etc. of mode 5 is changed, the setting contents of other setting screen associated with them also change.<br>・If the settings of these key parameters are changed, reconfirm the set contents of other settings screen. |
| 3. When 'time 000:00' is to be set in program pattern. | ・When setting the program pattern in mode 2, for considering the SV of next step momentarily (by step), 'time 000:00' can be set. 'Time 000:00' can also be set in continuous steps however when a program pattern that has set 'time 000:00' for many continuous steps is run, an error may sometimes occur in the entire system without correct operation being performed, hence do not do such settings.<br>・In step 'time 000:00', only the operation of changing momentarily the SV that is set is done.<br>・In step 'time 000:00', time signal does not operate. If you want to operate those functions even for a short time, set 'time 000:01' or more. |

## 7-11. Error message

### 7-11-1. Usual error display

If proper settings and operation is not done, following error messages are displayed for around 3 seconds. Confirm the contents of the error message and do the proper settings and operation again.

| Error message | Error contents |
|---|---|
| 1.<br>ERROR No. 56<br>PATTERN IS RUNNING | ・Pattern cannot be eliminated during operation (RUN).<br>・Eliminate the pattern when it is not operating. |
| 2.<br>ERROR No. 51<br>PATTERN EXIST | ・Pattern of the copying destination is not cleared.<br>・Confirm the copying destination and do the settings again. |
| 3.<br>ERROR No. 60<br>PATTERN NO SETTING | ・Pattern of copy source is not set.<br>・Set the pattern of copy source.<br>・Pattern is not set.<br>・Set the pattern. |
| 4.<br>ERROR No. 21<br>INVERTED L>H | ・L is exceeding H.<br>・Confirm L/H and do the settings again. |
| 5.<br>ERROR No. 37<br>PTN/DRV SELECT EXT | ・As pattern selection or program drive system selects 'External', operation cannot be done by front key.<br>・When doing the front key operation, change the pattern selection or program drive system. |
| 6.<br>ERROR No. 61<br>STEP REPEAT MISS | ・Operation cannot be started as there is an error in step repetition setting.<br>・Start the operation again after confirming the settings. |
| 7.<br>ERROR No. 26<br>SV LIMIT OVER | ・SV is exceeding the limit.<br>・Do the settings again after confirming the setting value. |
| 8.<br>ERROR No. 71<br>TIME : ONLY RESET | ・ Time is not changing as status is not RESET status.<br>・ Change the time after changing the status to RESET. |

### 7-11-2. System error display

If an abnormality occurs in the system, the following error messages are displayed for around 2 seconds. Confirm the contents of the error message and contact the dealer or our nearest office.

| Error message | Error contents |
|---|---|
| 1.<br>SYSTEM ERROR No. 01<br>CALIBRATION ERROR | ・Calibration data abnormality |
| 2.<br>SYSTEM ERROR No. 06<br>RAM BACK UP ERROR | ・Error in battery backup |

### 7-11-3. Warning display

If proper settings and operation is not done, following error messages are displayed for around 3 seconds. Confirm the contents of the warning message and do the proper settings and operation again.

| Warning message | Warning contents |
|---|---|
| 1.<br>WARNING No. 10<br>KEY LOCK | ・Setting is not changed because of the [Lock] condition at the mode screen.<br>・Change the setting after canceling the [Lock] condition. |

# 8. Initial settings

In '7. Setting screen' setting screen for each mode is explained, but you need not set all of them. The customer should select and set the required parameters depending on the specifications of the setter, system configuration of final product, control conditions etc.

Procedure for setting the minimum limit which is always to be done in the beginning for the finished product is explained here. Do the other settings as per the requirement.

: Always set　　: Set as per the requirement

① Setting SV decimal point　: Mode 5

※Set decimal point position for the range that is to be actually used.

↓

② Setting 'SV scale'　: Mode 5

※ Set scale in case of analog output.

↓

③ Setting 'Program pattern'　: Mode 2

※ Set program pattern.

↓

④ Select 'Pattern No.'　: Operation screen

※ Select the pattern number to be executed.

↓

⑤ 'RUN' operation　: Operation screen

※ Perform RUN and start the operation.

# 9. Operation

## 9-1. Confirmations before operation

Confirm the following contents before starting the operation.

| Item | Confirmation contents |
|---|---|
| 1. Wiring | ・Confirm that the wiring is correct.<br>Especially confirm very properly the wiring of high voltage parts like power supply and output. Confirm that the terminal screw is not loose.<br>・Confirm the wiring of not only the setter but also of the entire finished product. |
| 2. Power supply | ・Confirm that the power supply is in the rating range. |
| 3. Set contents | ・Confirm that the set contents are correct.<br>When power supply is inserted confirm that the status is RESET status. In RUN status control operation is started immediately. |

| | |
|---|---|
| ⚠Precautions | ① If power supply other than the rated power supply is connected, this setter may become out of order, or its performance may deteriorate or it may malfunction etc.<br>② If excessive current or excessive voltage is applied to output signal terminal of this setter, this setter may become out of order, or its performance may deteriorate or it may malfunction etc. |

## 9-2. Program operation and run operation

### 9-2-1. Run operation

| Status | Key operation and operation screen | Description |
|---|---|---|
| 1.RESET | [Key operation]<br>In operation screen, click the FNC key and then click RESET key.<br><br>[Operation screen]<br> | ・It is enabled in RUN status or stop status.<br>・RESET is the status where in program operation is not executed.<br>・When the step number is progressing due to program operation etc., the step number returns to '00' due to RESET operation. |

| | | |
|---|---|---|
| 2. RUN | In [Key operation] operation screen, click RUN MODE key after clicking FNC key.<br>[Operation screen]<br>RUN 21:45 STP H:M | ・It is RUN of program operation.<br>・It is enabled in RESET status or STOP status.<br>・Execute program operation according to the program pattern.<br>・If RUN is executed in RESET status, program operation starts. If RUN is executed in STOP status, program operation reopens. |
| 3. STOP | In [key operation] operation screen, click STOP SEL key after clicking FNC key.<br>[Operation screen]<br>STOP 21:45 STP H:M | ・It is the STOP of program operation.<br>・It is enabled in RUN status.<br>・If STOP is executed in RUN status, program pattern (SV and time) is stopped and at that time SV is the setting value when program pattern is stopped and it is a fixed output. |
| 4. ADV | In [key operation] operation screen click PTN key after clicking FNC key.<br>[Operation screen]<br>ADV 21:45 STP H:M | ・It is advancing (progress) of step.<br>・It is enabled in RUN status, or STOP status.<br>・If ADV operation is done in RUN status, the program operation continues from the beginning of advanced step. If ADV operation is done in STOP status, the program operation has STOP status at the beginning of advanced step.<br>・In one time ADV operation, progress is by one step hence perform those many number of ADV operations for a number of progress steps. |
| 5. PTN | In [key operation] operation screen click PTN key after clicking FNC key.<br>After that select a number using, PTN key RESET key.<br>[Operation screen]<br>PTN 21:45 STP H:M | ・Select Pattern number.<br>・It is enabled in RESET status.<br>・Pattern number selection status is obtained in RESET status by clicking PTN key after FNC key.<br>After that, by using the PTN key or RESET key, select the pattern number for which operation is to be done. At that time the number selected in No. of PTN is displayed in upper display. |
| 6. FAST | In [key operation] operation screen hold down RUN MODE key after clicking FNC key.<br>[Operation screen]<br>FAST 21:45 STP H:M | ・It is the FAST (fast forward) status of program pattern.<br>・It is enabled in RUN status.<br>・If RUN operation is done again in RUN status, the program pattern progresses from a speed of 'number of times' to a speed of 'ten times that number' only when RUN MODE key is clicked. When RUN MODE key is released, FAST status in cancelled.<br>・In case of FAST status, time signal output is output depending on the program pattern. However the time error becomes bigger.<br>※ Limited to specifications with external signal output, time signal layout and setting time.<br>・ADV operation progresses till the beginning of step number however the fast operation can progress up to the middle of program pattern (or step). |

If run operation is done, words indicating that run operation are displayed in 3 step snap display on the left side of the operation screen.

### 9-2-2 Procedure of program operation

When considering that program pattern and each parameter is set, the start/end procedure of program operation is as follows.

① Change the status to RESET. ※ See clause 1 described earlier.

↓

② Select the pattern number of the program to be run. ※ See clause 5 described earlier.

↓

③ Change the status to RUN. ※ See clause 2 described earlier.

↓

④ Operation is started, program operation is performed according to the program pattern and after that the program operation ends (END status).

↓

⑤ Change to RESET status. ※ See clause 1 described earlier.

## 9-3. Trial operation

After the confirmations before operation is done, refer to the following and start the trial operation and do various confirmations. This procedure is an example of the most basic trial operation procedure. Add the confirmation contents depending on specifications of the setter, system configuration of finished product, control conditions etc.

① Start the power supply. Considering the safety, preferably keep it in RESET status when power supply is started.

↓

② Confirm that the instrument configuring the system that includes the setter also, is normal.

↓

③ Confirm that all the signal levels (voltage value, current value, ON/OFF signal etc.) connected between the instrument configuring the system that includes the setter also, is normal.

↓

④ Set appropriate program pattern and start program operation through 'RUN' operation.

↓

⑤ See the status for a while and if there is no abnormality in display then there is no problem. However if there is an abnormality see '12 Trouble shooting'.

↓

⑥ Confirm that operation (Alarm, external signal input etc.) with peripheral devices that are connected to the setter is normal.

↓

⑦ Set various parameters of the setter as per the requirement.

↓

⑧ After some time of starting the operation confirm the normality of final product that includes the setter and all the devices configuring the system.

## 9-4.Precautions during operation

### 9-4-1. Change in settings during operation

When changing the settings during operation any of the settings except partial setting screen can be executed. When settings cannot be changed during operation, error message is displayed during setting change operation. However changing the settings during control operation by using parameter, may adversely affect the control, hence take care.

An example, when a step was changed during execution is given below, please refer to it.

① When SV is changed

An example where in SV1 (setting value) of step n is changed to SV2 is given. In case of this example, please understand that there was a setting value operation in step n+1 before change, however there is no setting value operation in step n+1 after change.

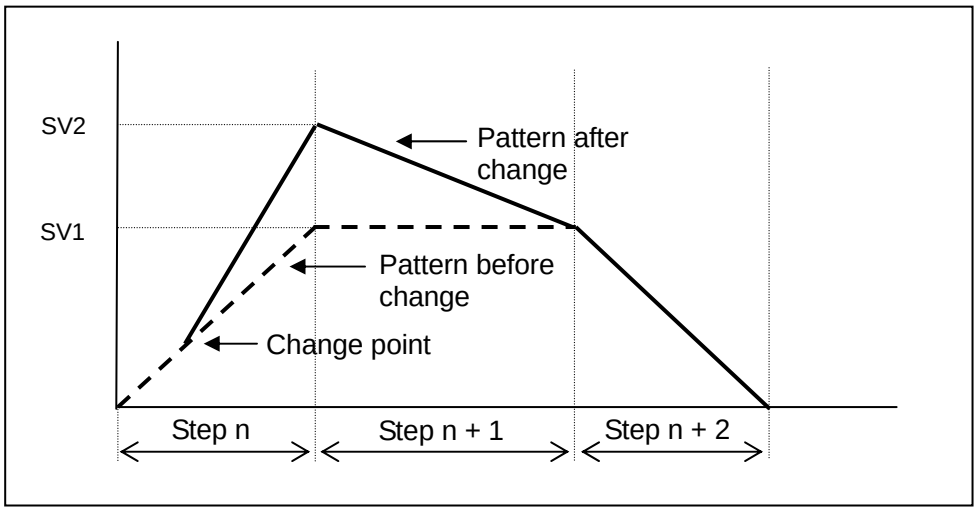


② When TIME is changed

An example wherein TIME (required time) of step n is changed just a little by T is given. On a whole there is a shift of only T minutes.

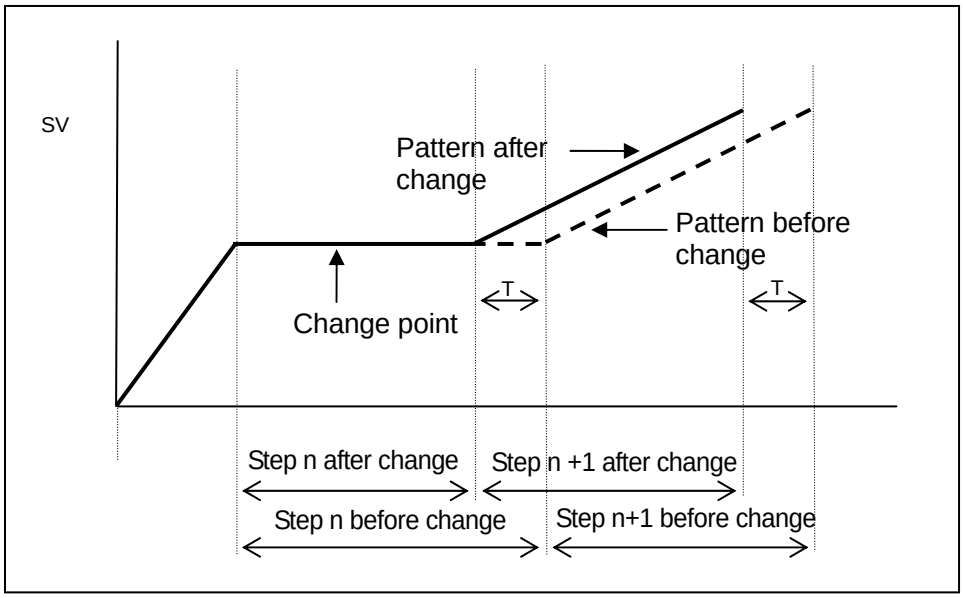

### 9-4-2. Precautions when power supply is started

1. Countermeasures against the erroneous output during power supply

During the power supply, until the setter starts normally, output related signals are sometimes momentarily output. Implement the countermeasures against erroneous output as per the requirement by using external circuit.

2. Precautions in case of momentary power cut off

When power supply is started again, operation status depends on the settings of 'Operation when power supply is started' of mode 1.

When 'CONTINUE' is selected, one returns to the status at the time of power supply cut off. In other words, if status is RUN at the time of power cut off then it remains RUN and if it is RESET at that time it remains RESET. When 'RESET' is selected, even if the status is 'RUN' in the setting screen and external signal input, the status is always 'RESET'. At that time if the status is changed to RUN again in the setting screen and external signal input, the status becomes RUN. In this case the status becomes RUN from step number 00. Especially when using external signal input take care about the sequence.

Even though the power supply cut off/start does not take place due to operation by the customer or due to final product sequence, there is a temporary power cut off/start due to some reason, and even when the setter detects the power supply cut off/start, the operation is performed based on the settings of 'Operation at the time of starting the power supply' of mode 1. For example if a good quality power supply is not used, if 'RESET' is selected when a momentary power cut off etc. takes place, unknowingly the status becomes 'RESET' status, hence take care. Do not select 'RESET' as it adversely affects the entire system of the final product when power supply is not stable.

| | |
|---|---|
| ⚠ Precautions | ① Take care while changing the settings during operation. Control may sometimes be adversely affected due to parameters.<br>② Use a good quality and stable power supply. Due to noise or momentary power cut off the setter may sometimes be adversely affected and it may sometimes malfunction unexpectedly. |

# 10. Detailed explanation of main functions

## 10-1 External signal input

In case of specifications with external signal input, setter can have special function by conductive signal (ON/OFF) of external no voltage contact point signal (relay, switch, open collector signal etc.). By 'External signal layout' of mode 11, external signal input function and terminal number is allotted and used. When external signal is allotted at ‘External signal allotment’ and external signal input is switched, key operation or switching by communications may be invalided.

| Function name | Explanation |
|---|---|
| 1. RUN/STOP | ・RUN/STOP operation is done by external drive signal.<br>・It is function of switching between RUN and STOP of program operation.<br>・Fixed external signal input is controlled by continuous signal. The status is RUN status after approximately 0.5 seconds or more after conduction (ON) and it is OFF status after approximately 0.5 seconds or more after non-conduction (OFF).<br>・It is enabled only when 'MASTER EXT' or 'MASTER FREE' is selected in 'Program drive system' of mode 1.<br>・Execution condition and operation contents etc are same as section 9-2 'Program operation and run operation'. |
| 2. ADV | ・ADV operation is done by external drive signal.<br>・It is a function to ADV (Advance: Progress) the step of program pattern.<br>・Fixed external signal input is controlled by momentary signal. Conduction (ON) is done for approximately 0.5 seconds or more and when it becomes non conducting (OFF) it advances (ADV) only by 1 step<br>・It is enabled only when 'MASTER EXT' or 'MASTER FREE' is selected in 'Program drive system' of mode 1.<br>・Execution condition and operation contents etc are same as section 9-2 'Program operation and run operation'. |
| 3. RESET | ・Run operation of RESET is done by external drive signal.<br>・It is a function for resetting the program operation.<br>・Fixed external signal input is controlled by momentary signal. RESET status is obtained after around 1.0 seconds or more after conduction (ON). In order to return to normal status after RESET, choose non conduction (OFF) directly.<br>・It is enabled only when 'MASTER EXT' or 'MASTER FREE' is selected in 'Program drive system' of mode 1.<br>・Execution condition and operation contents etc are same as section 9-2 'Program operation and run operation'. |
| 4. WAIT | ・Operation function exclusively for external drive input.<br>・It is a WAIT function for program operation. WAIT means stopping the program operation temporarily. In case of WAIT status, program operation is stopped by SV and time that exists just before WAIT and control operation is inherited by that SV. It is a function that is mainly used at the time of master slave synchronous operation.<br>・Fixed external signal input is controlled by continuous signal. The status is WAIT status after approximately 0.5 seconds or more after conduction (ON).<br>・It is enabled only when 'MASTER EXT' or 'MASTER FREE' is selected in 'Program drive system' of mode 1. |

| Function name | Description |
|---|---|
| 5. FAST | ・Run operation of FAST function is done using external drive signal.<br>・It is a function for fast forwarding the program operation.<br>・Fixed external signal input is controlled using continuous signal. The status becomes FAST after approximately 0.5 seconds or more after switching it ON (ON).<br>・It is enabled only when 'MASTER EXT' or 'MASTER FREE' is selected in 'Program drive system' of mode 1.<br>・Execution conditions and operation contents etc. are similar to 'Program operation and run operation' in section 9.2. |
| 6. PTN 1<br>PTN 2<br>PTN 4<br>PTN 8<br>PTN10<br>PTN 20 | ・Pattern number (PTN) is selected by external signal input.<br>・Pattern number selection is based on control signal due to BCD code.<br>・Fixed external signal input is controlled by continuous signal. See the example table below, depending on the pattern number to be selected, conduct (ON) external signal input with ○ mark. Pattern number is selected in around 0.5 seconds after conduction (ON). In addition, it is possible to select conducting patterns except ○ mark depend on the pattern number. For example, when select pattern No. 10, select conducting PTN8 and PTN2. |

| | PTN No.9 | PTN No.8 | PTN No.7 | PTN No.6 | PTN No.5 | PTN No.4 | PTN No.3 | PTN No.2 | PTN No.1 |
|---|---|---|---|---|---|---|---|---|---|
| PTN20 | × | × | × | × | × | × | × | × | × |
| PTN10 | × | × | × | × | × | × | × | × | × |
| PTN 8 | ○ | ○ | × | × | × | × | × | × | × |
| PTN 4 | × | × | ○ | ○ | ○ | ○ | × | × | × |
| PTN 2 | × | × | ○ | ○ | × | × | ○ | ○ | × |
| PTN 1 | ○ | × | ○ | × | ○ | × | ○ | × | ○ |

| | PTN No.30 | PTN No.29 | PTN No.26 | PTN No.22 | PTN No.20 | PTN No.17 | PTN No.15 | PTN No.13 | PTN No.10 |
|---|---|---|---|---|---|---|---|---|---|
| PTN20 | ○ | ○ | ○ | ○ | ○ | × | × | × | × |
| PTN10 | ○ | × | × | × | × | ○ | ○ | ○ | ○ |
| PTN 8 | × | ○ | × | × | × | × | × | × | × |
| PTN 4 | × | × | ○ | × | × | ○ | ○ | × | × |
| PTN 2 | × | × | ○ | ○ | × | ○ | × | ○ | × |
| PTN 1 | × | ○ | × | × | × | ○ | ○ | ○ | × |

・If BCD code other than pattern number 1 to 30 is selected, the pattern number that was selected earlier remains as it is.
・It is enabled only when 'EXT' or 'FREE' is selected in 'Pattern selection system' of mode 1.
・As an example if only pattern numbers from 1 to 4 need to be selected, only 3 external signal inputs of PTN 1, PTN 2, PTN 4 can also be allotted.
・Execution conditions and operation contents etc. are similar to section 9-2 'Program operation and run operation'.

*' No setting condition '－－－－－' is displayed when shipped form factory. If set any function once, not setting condition is not displayed. Allocation setting is not initialized (no setting condition), even if contents of settings are initialized.

## 10-2. External signal output

This setter can output externally the time signal and various status signals, in case of specifications with external signal output. In 'External signal layout' of mode 11, external signal output function and terminal function can be allotted and used.

| Function name | Description |
|---|---|
| 1. TS1<br>TS2<br>TS3<br>TS4<br>TS5<br>TS6<br>TS7<br>TS8 | ・It is a time signal (continuous signal).<br>・There are 8 types of time signal from TS1 to TS8 and when time signal is ON output signal is ON. |
| 2. RUN/STOP | ・It is the RUN/STOP status signal (Continuous signal).<br>・When operation status is RUN output signal is ON and when it is STOP, output signal is STOP. |
| 3. ADV | ・It is ADV status signal (momentary signal).<br>・When operation status is ADV (Advance: Progress), output signal is ON only for around 0.5 seconds. |
| 4. RESET | ・It is the RESET status signal (Continuous signal).<br>・When operation status is RESET, output signal is ON. |
| 5. WAIT | ・It is the WAIT status signal (Continuous signal).<br>・When operation status is WAIT, output signal is ON.<br>WAIT means wait of real temperature compensation and in external signal input the status is WAIT when it is ON. |
| 6. END | ・It is the END status signal (Continuous signal).<br>・When operation status is END (end program) output signal is ON. |

*' No setting condition '－－－－－' is displayed when shipped form factory. If set any function once, not setting condition is not displayed. Allocation setting is not initialized (no setting condition), even if contents of settings are initialized.

Operation status and status signal are collectively shown in the following diagram.

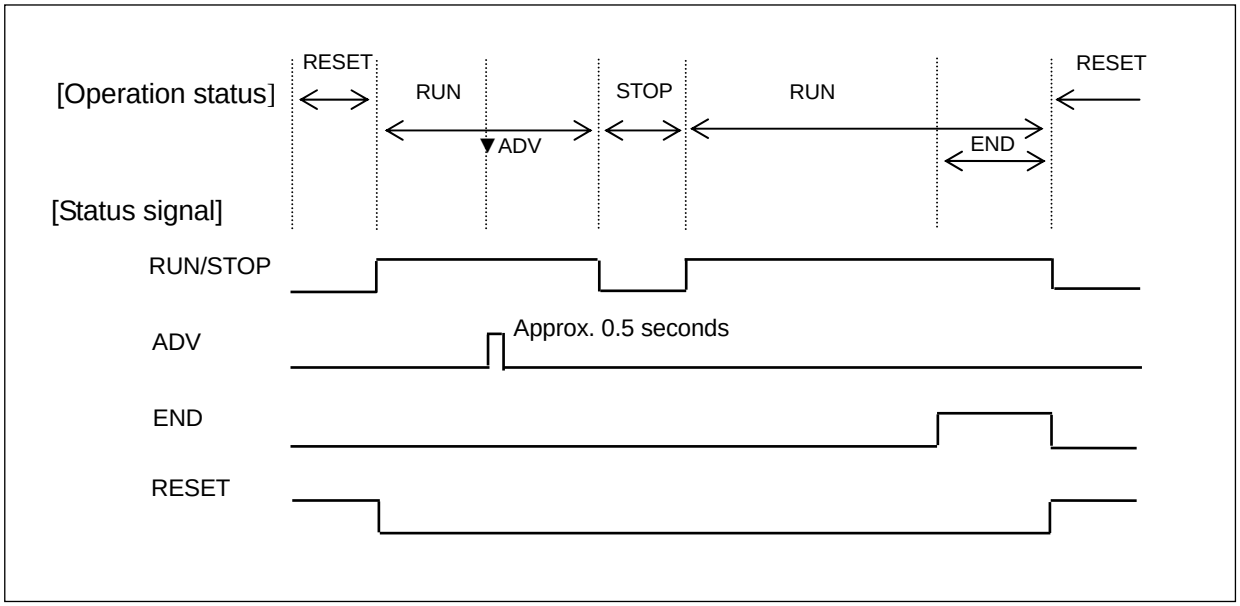

## 10-3. Master slave synchronous operation

By combining external drive signal and status signal for a number of KP series unit and also including real temperature compensation status synchronous program operation can be done In case of specifications with external signal input and external signal output only.

Even when real time compensation operation takes place, a system that continues the synchronous operation is called master slave synchronous operation and it is one of the excellent functions of KP series. In case of real time compensation operation, when asynchronous operation is okay, it is okay to operate using series connection of general external drive signal.

1. View point

Combine external drive signal and status signal. From among a number of units performing synchronous operation, consider one unit as master instrument and the rest of them as slave instruments. Slave instruments will receive from the master instrument the status signal by using external drive signal and will run the program. If any one of the units is in WAIT status during real temperature compensation operation, by sending the status signal of that WAIT to WAIT of external drive signal of the master instrument, all the other slave instruments also get the WAIT status. Thus in case of real temperature compensation operation also, a synchronous operation that minimizes temporal errors can be realized. When master device and slave device are all setters, you can omit the wiring (④･D) shown by dotted line in the figure below.

2. Wiring

An example of basic master slave synchronous operation wiring is given below.

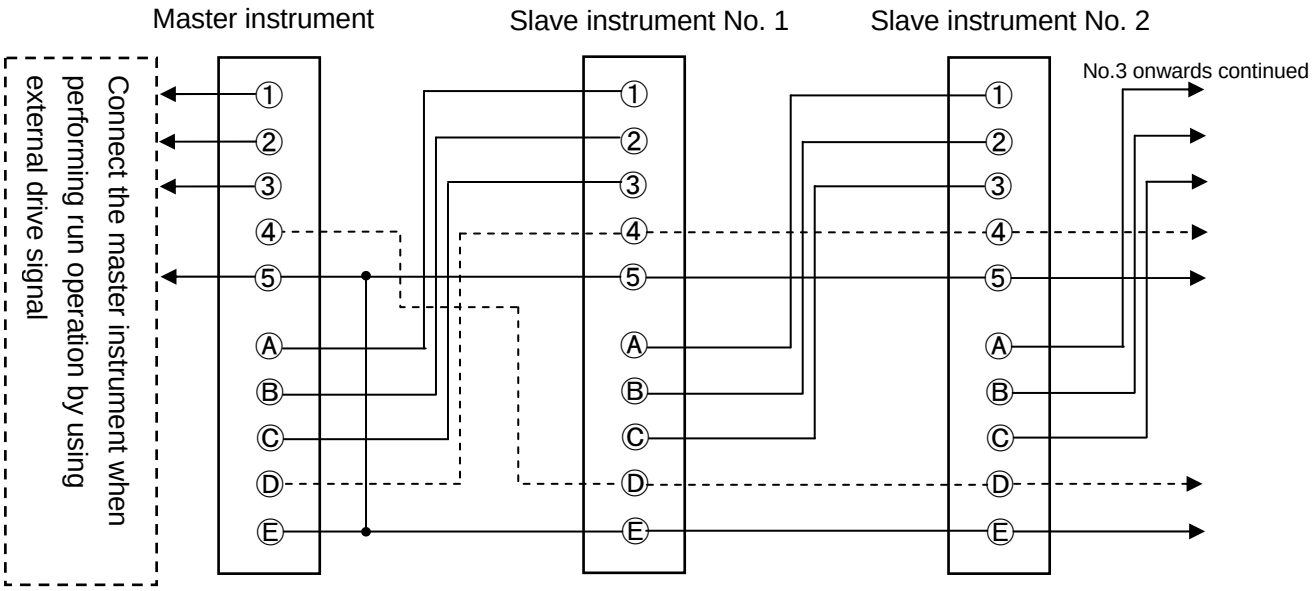


| External drive signal | | Status signal | |
|---|---|---|---|
| Terminal | Function | Terminal | Function |
| ① | RUN/STOP | Ⓐ | RUN/STOP |
| ② | ADV | Ⓑ | ADV |
| ③ | RESET | Ⓒ | RESET |
| ④ | WAIT | Ⓓ | WAIT |
| ⑤ | COM | Ⓔ | COM |

※ As terminal is a tentative number, replace it by the terminal number you are using and read.

3. Setting

Set the 'Program drive system' of mode 1 as follows.

| | Setting contents |
|---|---|
| Master instrument | Set from any of the following.<br>・'MASTER KEY'<br>: Set when performing the run operation using the front key.<br>・'MASTER EXT'<br>: Set when performing run operation by using external drive signal.<br>・'MASTER COM'<br>: Set when performing run operation by communication. However it can be selected only in case of specifications with communication.<br>・'MASTER FREE'<br>: Set when performing the run operation by front key/external drive signal/communication optional signal. However, communication can be selected only in case of specifications with communication. |
| Slave instrument | Set all to 'SLAVE EXT'. |

When 'MASTER FREE' is set in master instrument, run operation can be done by optional signal instead of changing the settings and it is convenient, however, as operation status is based on the signal that is last sent, it is very difficult to judge as to on which signal does the last operation signal depend.

For example, when operating using both, front key and external drive signal, the status of external switch connected to external drive signal and actual operation status may differ. Thus this is normal for this setter however for the entire system of the final product it may be received as mal operation which is risky hence take care.

In order to avoid the mal operation of the entire system we do not recommend 'MASTER FREE' setting.

4. Operation

① Run operation

・Run operation is executed for master device only.

・All the slave devices are run by synchronizing them with the status signal of the master device.

② Real temperature compensation operation

・Controller is used in either the master device or the slave device, and when real temperature compensation operation is performed, wait signal is output from that machine,
WAIT status signal is output from that machine and WAIT signal is sent to all the slave devices from this master device. Thus all the connected products have the wait status and are synchronized.

## 10-4. Communication interface

The setter is provided with various communication functions and they are as follows.

### 10-4-1. Engineering port

It is a communication function provided in all the products. Engineering port exists on the right side on the front after opening the lower cover of the front part. Communication with the PC can be done by connecting an exclusive engineering cable (sold separately).

Specifications of communication by using the engineering port is as follows.
・Communication protocol: MODBUS-RTU
・Communication speed: 9600bps
・Communication character: bit length 8/parity NON/stop bit 1

### 10-4-2. Specifications with communication

Usually when doing communication select specifications with communication. Type of communication can be selected from amongst RS232C, RS422A and RS485. Second port communication can be added only for RS232C and RS485.

Communication enables the setting of parameters (Data Write) and data reading (Data Read) by connecting to PC and remote operation and data management done using PC can be done. One more function of KP series, is the communication transmission (digital transmission) function. It is a function which is combined with digital indicating controller DB series which is a sister model, and SV transmission is sent from KP series using communication and by receiving it as remote SV of DB series, using communication, a remote operation without any error at all can be realized. Remote operation due to remote signal input of DB series is called Analog Remote and remote operation due to communication remote is called Digital Remote. In case of digital output specifications, output signal of this setter depends on digital output and remote operation with DB series can be done. Digital transmission can be done by sending the output signal using communications and can be used as usual communication (COM). Whereas digital output only sends output signal digitally.

The following diagram is a model example of remote operation by communication transmission through KP series and communication remote function due to DB series, while selecting specifications with 2 port communication and performing high order communication with the PC.

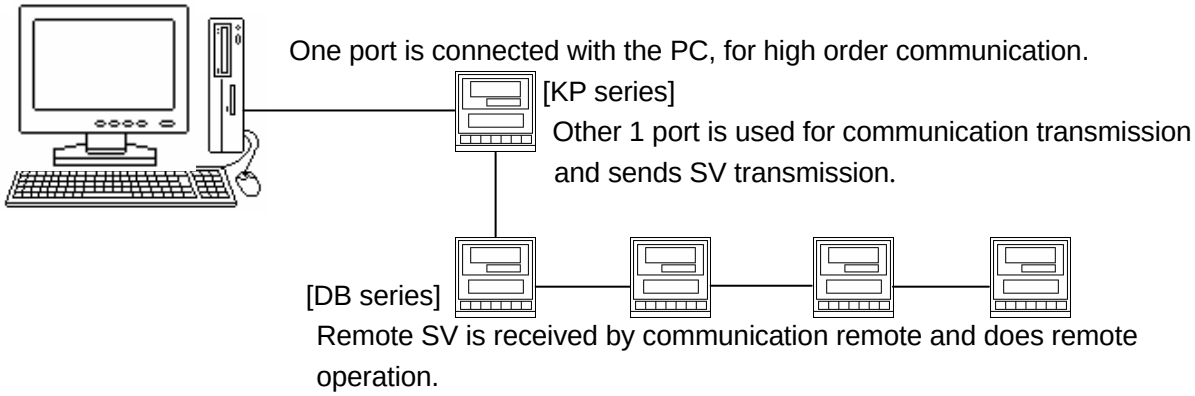

# 11. Engineering Port

This function can connect with the PC from the front of the setter. Even if this function is not in the specifications with communication interface, it is provided as standard to all products.

An exclusive engineering cable is inserted in this port and connected to the PC.

When this instrument has digital output specification, use after setting [ENG] in the [MODE 8, selecting communications 2 port function]. When [ENG] is set, output signal is not transmitted from digital output.

Parameter setup software 'PASS' is available with our company. Various parameters can be easily set from the front of the setter by using this 'PASS' and engineering cable, and PC.

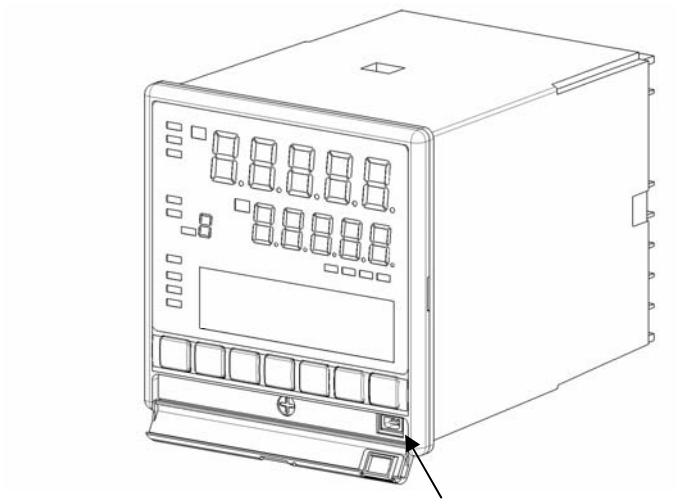

Engineering port

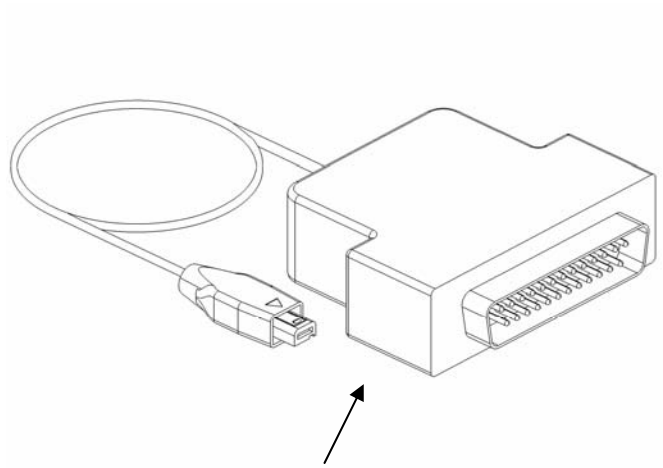

Engineering cable

Engineering port is there on that structure for temporary connection and is not for usual connection.
If you want to communicate using usual connection, specify specifications with communication interface at the time of purchasing. It is permanently connected from the rear side terminal for you to use it.

| ⚠ Precaution | Connecting and disconnecting of engineering cable to engineering port in this instrument should be done while applying power. |
|---|---|

# 12. Trouble shooting

| Condition | Items to be confirmed |
|---|---|
| 1. Lower display is not displayed normally, displayed strips. | ・Set the proper value of the [Display contrast] in mode11.<br>40 to 70% of range is suitable setting value. When setting the range of 80 to 100%, stripes appear in the LCD. The setting value is set the initial value (50%) in ordinary use. |
| 2. Error message is displayed when setting the parameter | ・After confirming error message, change to the correct setting because of the setting which is not registered. |
| 3. Error message is displayed when starting operations | ・After confirming error message, change to the correct setting because of the setting which is not started operation. |
| 4. Cause unclear however operation is strange | ・Confirm that the contents of various parameters are correct.<br>・Even then if the operation of the controller is strange, initialize the set contents. Do all the settings again and confirm that there is no problem in it. |

When problems are not improved after executing the above troubleshooting, contact the dealer or your local CHINO's sales agent.

| | |
|---|---|
| ⚠ Warning | When repair or modification of this instrument is needed, contact the dealer or your local CHINO's sales agent. Make sure that no persons other than service engineers approved by CHINO CORPORATION do not repair or modify this instrument by replacing parts.<br>The data of settings may be deleted during repairing for unexpected trouble (power failure, earthquake, or other unexpected accident).<br>Backup the data of settings before having the instrument repaired. We are not responsible for the lost or damaged data. |

# 13. Checking and maintenance

## 13-1. Checking

### 13-1-1. Checking according to the trial operation

Every time before starting the operation do a trial operation and confirm that the final product is correct.

### 13-1-2. Checking the accuracy

In the setter, depending on the requirement of the client there are items that require periodical accuracy checking. Due to secular changes, these may slightly drift from accuracy, from the time when it was purchased.
Accuracy checking is done in our company hence consult your dealer or our company's nearest office.

### 13-1-3. Overhaul

Since the setter is reliable, we recommend an overhaul after 2-3 years. For ordering overhaul contact your dealer or our company's nearest office.

## 13-2. Life component

Clear life component of the controller is as follows.
Please understand that secular changes and aging occurs in almost all the products.

| Component name | Estimated life |
|---|---|
| 1. Electrolysis condenser<br>※ Condenser for smoothness of electric circuit. | Approximately 5 years<br>(Surrounding temperature: 30°C, operation time: 12 hours/day) |
| 2. Battery<br>※ Battery for memory backup. | Approximately 10 years<br>(Surrounding temperature: 30°C, operation time: 12 hours/day) |

## 13-3. Disposal

| | |
|---|---|
| ⚠Precaution | ① A small amount of hazardous substance below the specified level with RoHS directive is included in this controller.<br>② When disposing the controller, always request a professional to do it, or dispose the controller in according to the garbage collection method of the each community.<br>③ This controller uses lithium battery. When disposing the controller, always request a professional to do it.<br>④ Separate the box, plastic bags, and cushioning materials the controller is packaged in according to the garbage collection method of the each community, and please cooperate to recycle. |

# 14. Explanation of terms

| Term | Explanation |
|---|---|
| SV correction | It is a function that corrects (bias) the SV (setting value). |
| SV decimal point | It is a function that can select the decimal point position of SV (setting value).<br>Decimal point position can be selected from 5 digits that are displayed. |
| SV decimal point for display | This is a function for changing position of the decimal point of SV at the upper display. For example, when number of digits after decimal point is not displayed, use this function. |
| SV scale | In case of analog output (current and voltage output format) specifications, it is a function in which SV (setting value) is plotted against output range.<br>For example, in case of current output format, lower limit (L) and higher limit (H) is respectively 100 and 0 against the output range 4-20mA and is as shown in the figure below.<br> 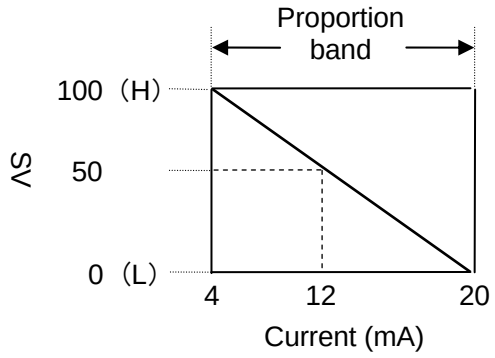 <br> |

# 15. Accessories

## 15-1. Front protective cover

It is a cover for protecting the front part and also to protect the keys from being tampered.

During closed installation when it is not mounted but is with front protective cover, the panel mounting space of the setter is 105 mm or more.

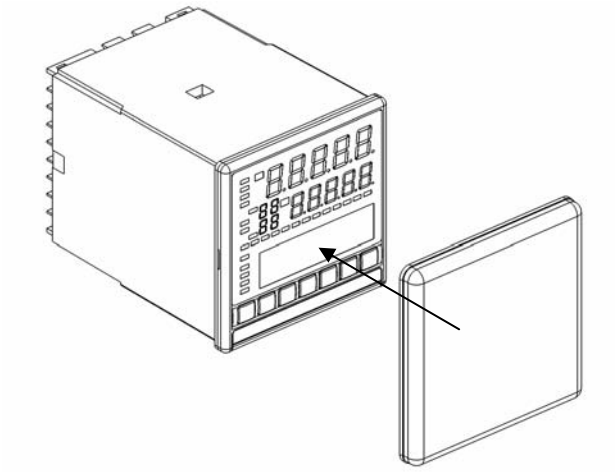

## 15-2. Contact protection element

Contact protection element is connected for noise rejection to the relay output terminal of the setter. Always do the loading and wiring through contact protection element and buffer relay in relay output like ON-OFF pulse type, ON-OFF servo type and alarm output.

Contact protection element as shown below is available with our company also, use the model that you require.

| Model | Specifications | Open close current | Application |
|---|---|---|---|
| CX-CR1 | 0.01μF + 120Ω | Less than 0.2A | For light load |
| CX-CR2 | 0.5μF + 47Ω | 0.2A or more | For heavy load |

While using it, the leak current flows depending on the load power supply as shown below hence take care.

| Model | Power voltage: 200V | | Power voltage: 100V | |
|---|---|---|---|---|
| | 50Hz | 60Hz | 50Hz | 60Hz |
| CX-CR1 | Approximately 2mA | Approximately 2mA | Approximately 1mA | Approximately 1mA |
| CX-CR2 | Approximately 45mA | Approximately 55mA | Approximately 23mA | Approximately 28mA |

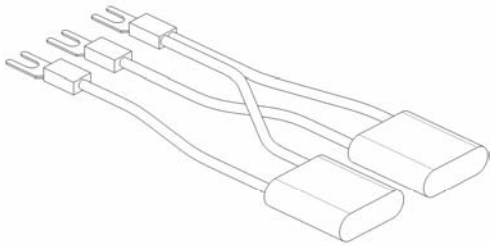

# 16. Specifications

■ Output signal specifications
Output signal : Analog output 4-20mA, 0-1V, 0-10V
Digital output RS422A, RS485
Accuracy rating : ±0.1%FS
Output update cycle : Analog output Approximately 0.1 seconds
Digital output Approximately 1 second
Approximately 0.5 seconds
Resolution : Approximately 1/30000
Output impedance : Voltage output Approximately 10Ω
Load resistance: Current output 400Ω or less
Voltage output 50kΩ or more

■ Display specifications
Upper window : LED
Lower window : LCD (With back light) 108×24 dots

■ General specifications
Rated power supply voltage
: General power supply specifications 100-240VAC
24V Power supply specifications 24VAC/24VDC
Rated power supply frequency
: General specifications 50/60Hz
24V Power supply specifications DC, 50/60Hz
Maximum power consumption:
General power supply specifications
Without option 100VAC 10VA
240VAC 15VA
With option 100VAC 15VA
240VAC 20VA
24V Power supply specifications
Without option 24VAC 10VA
24VAC 5W
With option 24VAC 15VA
24VAC 10W
Countermeasures against power failure
: Maintaining the setting contents according to EEPROM
(Transfer count less than one million times)
Terminal screw : M3.5
Insulation resistance
: Primary terminal and secondary terminal 20MΩ or more (500VDC)
Primary terminal and grounding terminal 20MΩ or more (500VDC)
Secondary terminal and grounding terminal 20MΩ or more (500VDC)
Withstand voltage
: Between primary terminal and secondary terminal
1,500VAC (1 minute)
Between primary terminal and grounding terminal
1,500VAC (1 minute)
Between secondary terminal and grounding terminal
500VAC (1 minute)
※ Primary terminal: Terminal of power supply, control output, and alarm output
Secondary terminal: All terminals except primary terminal, power supply (24VAC/24VDC)
Casing : Fire resistant polycarbonate
Color : Grey or black
Mounting : Embedded panel mounting
External dimensions : 96(H)×96(W)×127(D)
(Depth from the panel surface is 120)
Weight: Without option Approximately 450g
With option Approximately 580g

■ Safety standards
CE approval: EN61326: 1997 +A1+A2+A3
EN61010-1:2001
(Over voltage category II, pollution level 2)
※ Due to the test condition of EMC directive, indication value or output value which is equivalent to maximum ±10% or maximum ±2mV which ever is greater, changes.
UL file No.: E214646
UL :UL61010-1 2nd edition
c-UL :CAN/CSA C22.2 No.61010-1-04

■ Reference operation conditions
Surrounding temperature : 23℃±2℃
Surrounding humidity : 55%RH±5% (With no condensation)
Power voltage : General power supply specifications
100VAC±1%
24V Power supply specifications
24VDC±1%
Power supply frequency : General power supply specifications
50/60Hz±0.5%
24V Power supply specifications
DC
Mounting orientation : Forward or backward ±3°, lateral ±3°
Set up height : Altitude below 2000m
Vibrations : 0m/s$^2$
Shocks : 0m/s$^2$
Mounting condition : Simple panel mounting (There should be a space above below and to the right and left)
Wind : None
External noise : None
Warm up time : 30 minutes or more

■ Normal operation condition
Surrounding temperature : -10°C to 50°C
(-10°C to 40°C for closed installation)
Surrounding humidity : 10 to 90%RH (With no condensation)
Power voltage : General power supply specifications
90 to 264VAC
24V Power supply specifications
21.6-26.4VDC/AC
Power supply frequency : General power supply specifications
50/60Hz±2%
24V power supply specifications
DC, 50/60Hz±2%
Mounting orientation : Forward or backward±10°, lateral±10°
Set up height : Altitude below 2000m
Vibrations : 2 m/s2
Shocks : 0m/s2
Mounting condition : Simple panel mounting (There should be space above and below)
External noise : None
Surrounding temperature variation ratio : Less than 10°C/hour

■ Transport conditions

Surrounding temperature : -20°C to 60°C

Surrounding humidity : 5 to 90%RH (With no condensation)

Vibrations : 4.9m/s$^2$ (10 to 60Hz)

Shocks : 392m/s$^2$

However these are the factory shipping packing conditions.

■ Storage conditions

Surrounding temperature : -20°C to 60°C

However temperature for long term preservation is 10°C to 30°C.

Surrounding humidity : 5 to 90%RH (With no condensation)

Vibrations : 0m/s$^2$

Shocks : 0m/s$^2$

However these are the factory shipping packing conditions.

■ Option

[Communications interface]

Communications points : Maximum 2

Communications type : RS232C, RS422A, RS485

Protocol : MODBUS(RTU), MODBUS(ASCII), PRIVATE

Insulation : Internal circuit is insulated (20MΩ or more and・500VDC)

Communications interface points are not insulated

[External signal input ]

Input points : Maximum 20

Input signal : No voltage contact point, open collector signal

External contact point capacity:5VDC・2mA

Function : RUN/STOP

ADV

RESET

WAIT

FAST

Pattern number selection

(6 points PTN1/PTN2/PTN4/PTN8/PTN10/PTN20)

Insulation : Internal circuit is insulated (20MΩ or more and 500VDC)

External signal input points are not insulated

[External signal output]

Number of outputs : Maximum 20

Output signal : No voltage contact point, open collector output

Output capacity : 24VDC・50mA

Function : Time signal 8 points

(TS1/TS2/TS3/TS4/TS5/TS6/TS7/TS8)

RUN/STOP

ADV

RESET

WAIT

END

Insulation : Internal circuit is insulated (20MΩ or more and 500VDC)

External signal output points are not insulated

[Panel sealing]

Equivalent to IEC60529 IP54

(Not possible during closed instrumentation)

[Terminal cover]

Cover the terminals for safe.

# 17. Parameter list table

## [Parameters not linked to Program Pattern]

| Mode No. | Setting item | | Default value (During factory shipment) | Customer setting value | Setting range |
|---|---|---|---|---|---|
| 0 | Executing SV and time | SV | 0000.0 | | SV scope |
| | | Time | 000:00 | | 000:00 to 999:59 |
| | SV correction | | 000.00 | | -199.99 to 200.00 |
| 1 | Run operation key lock | | UNLOCK | | UNLOCK、LOCK |
| | Program drive system | | MASTER KEY | | MASTER KEY, MASTER EXT<br>SLAVE EXT, MASTER COM<br>MASTER FREE |
| | Pattern selection system | | KEY | | KEY、EXT、COM、FREE |
| | Time display system | | PASS STEP | | PASS STEP、PASS PATTERN<br>REMAIN STEP<br>REMAIN PATTERN |
| | Operation when starting the power supply | | CONTINUE | | CONTINUE、RESET |
| 2 | SV scope | | 0000.0 to 2000.0 | | -1999.9 to 3000.0 |
| | Pattern clear | | END | | EACH (01 to 30), ALL |
| | Pattern copy | | END | | PTN: (01 to 30) → (01 to 30), YES |
| | SV during Reset | | 0000.0 | | SV scope |
| | Time unit | | HOUR:MIN | | HOUR:MIN, MIN:SEC |
| 5 | SV decimal point | | 1 | | 0 to 4 |
| | SV scale | | 0000.0 to 2000.0 | | -1999.9 to 3000.0 |
| | SV decimal point for display | | 1 | | 0 to 4 |
| 8 | Communication speed | | 9600bps | | 2400、4800、9600、19200、38400 |
| | Instrument number | | 01 | | 01 to 99 |
| | Communication function | | COM | | COM、TRANS |
| | Communication protocol | | MODBUS(RTU) | | MODBUS(RTU)、MODBUS(ASCII)、<br>PRIVATE |
| | Communication character | | 8BIT/NON/STOP1 | | 7BIT/EVEN/STOP1<br>- - -<br>8BIT/ODD/STOP2 |
| | Select communication 2 port function | Communication 2 port | ENG | | COM・ENG |
| | | Digital output | COM* | | COM・ENG |
| | Communication speed for COM2 | | 9600bps | | 2400、4800、9600、19200、38400 |
| | Instrument number for COM2 | | 01 | | 01 to 99 |
| | Communication function for COM2 | | COM | | COM、TRANS |
| | Communication protocol for COM2 | | MODBUS(RTU) | | MODBUS(RTU)、MODBUS(ASCII)、<br>PRIVATE |
| | Communication character for COM2 | | 8BIT/NON/STOP1 | | 7BIT/EVEN/STOP1<br>- - -<br>8BIT/ODD/STOP2 |
| 11 | Display back light | | AUTO | | GREEN, ORANGE, AUTO |
| | Display contrast | | 050% | | 000 to 100 |
| | Key back light | | AUTO | | AUTO、OFF、ON |
| | External signal layout | | No allocation | | See 'External signal input' |
| | Testing alarm output | | No.0 | | No.0 to 8 (0 is output OFF) |
| | Testing timer signal output | | OFF | | OFF, RUN/STOP, ADVANCE<br>RESET, WAIT, END |

* When select combination that digital output is ‘RS485’ and communications specifications is ‘RS422A’, it becomes ‘ENG’.

## [Parameters linked to Program Pattern]

MODE2

| Pattern No. | |
|---|---|

| Pattern repeat: No/Yes ( Times) | Pattern Link: No/Yes (Link destination pattern No. ) |
|---|---|
| Setting range | 0000 to 9999 |

| SV | | | | | | | | | | | | | | | | | | | | |
|---|---|---|---|---|---|---|---|---|---|---|---|---|---|---|---|---|---|---|---|---|
| 100 | | | | | | | | | | | | | | | | | | | | |
| 90 | | | | | | | | | | | | | | | | | | | | |
| 80 | | | | | | | | | | | | | | | | | | | | |
| 70 | | | | | | | | | | | | | | | | | | | | |
| 60 | | | | | | | | | | | | | | | | | | | | |
| 50 | | | | | | | | | | | | | | | | | | | | |
| 40 | | | | | | | | | | | | | | | | | | | | |
| 30 | | | | | | | | | | | | | | | | | | | | |
| 20 | | | | | | | | | | | | | | | | | | | | |
| 10 | | | | | | | | | | | | | | | | | | | | |
| 0 | | | | | | | | | | | | | | | | | | | | |

| Step No. | 00 | 01 | 02 | 03 | 04 | 05 | 06 | 07 | 08 | 09 | 10 | 11 | 12 | 13 | 14 | 15 | 16 | 17 | 18 | 19 |
|---|---|---|---|---|---|---|---|---|---|---|---|---|---|---|---|---|---|---|---|---|

| | | | | | | | | | | | | | | | | | | | | |
|---|---|---|---|---|---|---|---|---|---|---|---|---|---|---|---|---|---|---|---|---|
| Program pattern | SV | | | | | | | | | | | | | | | | | | | |
| | TIME | | | | | | | | | | | | | | | | | | | |
| | Step repeat | | | | | | | | | | | | | | | | | | | |
| Sequence | SV | No. | | | | | | | | | | | | | | | | | | |
| | Time signal | TS1 | | | | | | | | | | | | | | | | | | |
| | | TS2 | | | | | | | | | | | | | | | | | | |
| | | TS3 | | | | | | | | | | | | | | | | | | |
| | | TS4 | | | | | | | | | | | | | | | | | | |
| | | TS5 | | | | | | | | | | | | | | | | | | |
| | | TS6 | | | | | | | | | | | | | | | | | | |
| | | TS7 | | | | | | | | | | | | | | | | | | |
| | | TS8 | | | | | | | | | | | | | | | | | | |

| | No. | ON | OFF |
|---|---|---|---|
| Time signal 8 types | Default | 000:00 | 001:00 |
| | 1 | | |
| | 2 | | |
| | 3 | | |
| | 4 | | |
| | 5 | | |
| | 6 | | |
| | 7 | | |
| | 8 | | |
| | Setting range | 000:00 to 999:59 | 000:00 to 999:59 |

# 18. Parameter directory list table

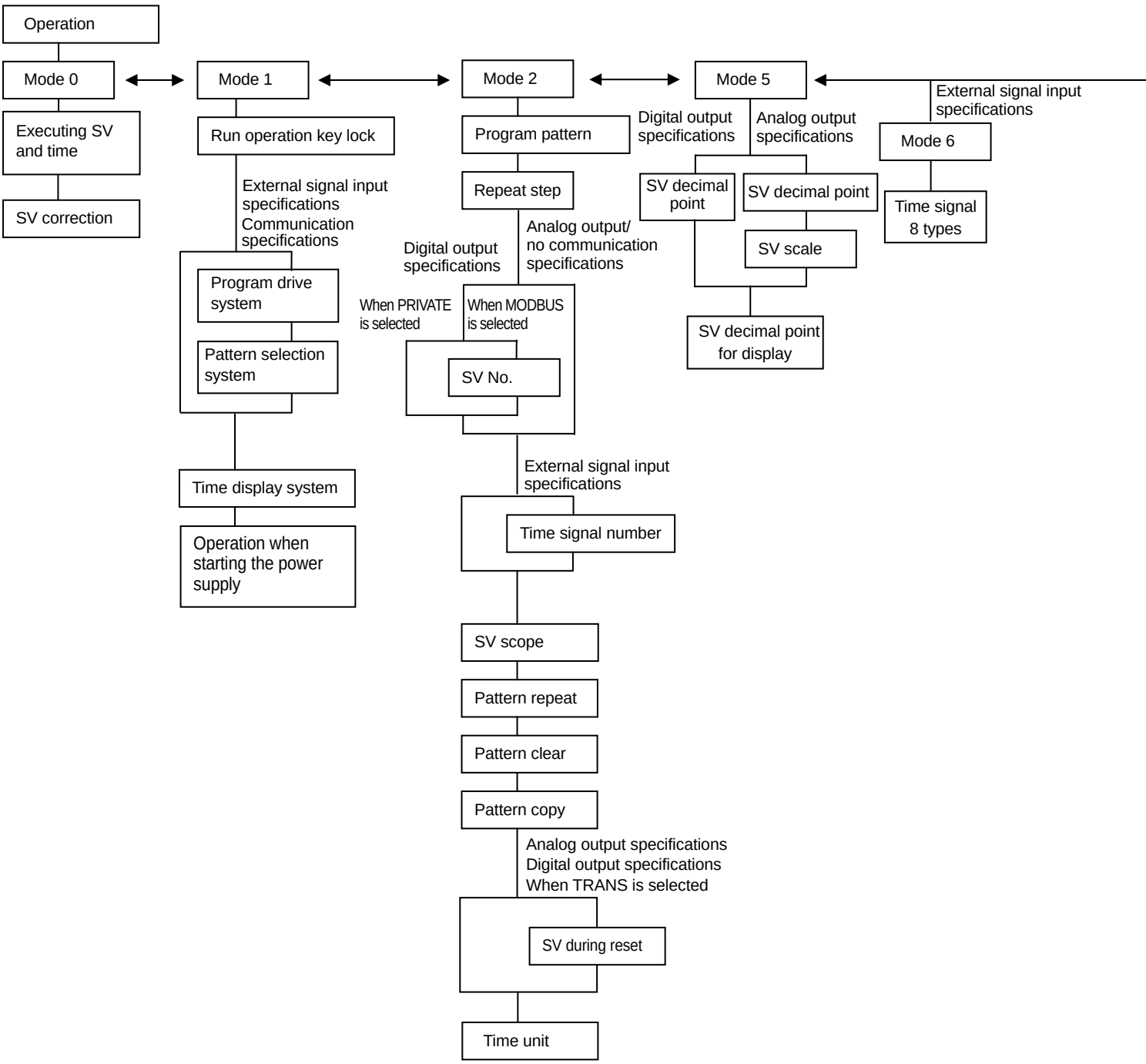

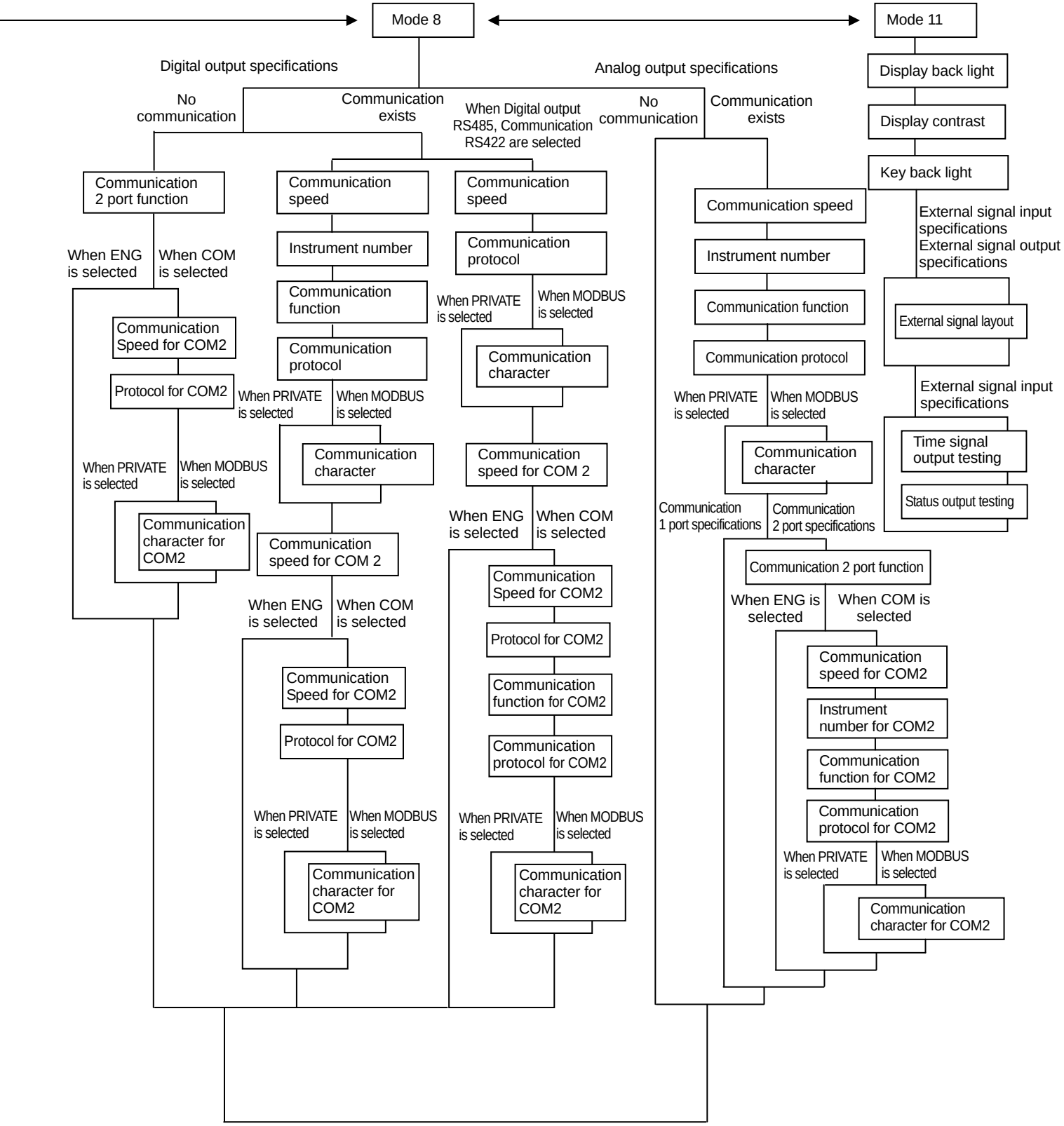
Mode 8
Mode 11
Digital output specifications
Analog output specifications
No communication
Communication exists
When Digital output RS485, Communication RS422 are selected
No communication
Communication exists
Communication 2 port function
When ENG is selected
When COM is selected
Communication Speed for COM2
Protocol for COM2
When PRIVATE is selected
When MODBUS is selected
Communication character for COM2
Communication speed
Instrument number
Communication function
Communication protocol
When PRIVATE is selected
When MODBUS is selected
Communication character
Communication speed for COM 2
When ENG is selected
When COM is selected
Communication Speed for COM2
Protocol for COM2
When PRIVATE is selected
When MODBUS is selected
Communication character for COM2
Communication speed
Communication protocol
When PRIVATE is selected
When MODBUS is selected
Communication character
Communication speed for COM 2
When ENG is selected
When COM is selected
Communication Speed for COM2
Protocol for COM2
Communication function for COM2
Communication protocol for COM2
When PRIVATE is selected
When MODBUS is selected
Communication character for COM2
Communication speed
Instrument number
Communication function
Communication protocol
When PRIVATE is selected
When MODBUS is selected
Communication character
Communication 1 port specifications
Communication 2 port specifications
Communication 2 port function
When ENG is selected
When COM is selected
Communication speed for COM2
Instrument number for COM2
Communication function for COM2
Communication protocol for COM2
When PRIVATE is selected
When MODBUS is selected
Communication character for COM2
Display back light
Display contrast
Key back light
External signal input specifications
External signal output specifications
External signal layout
External signal input specifications
Time signal output testing
Status output testing

# 19. Engineering unit sticker

The setter is supplied with sticker for engineering unit. Fix it in the appropriate position as shown in the upper display as per your convenience.

Then if long time has passed after fixing this sticker, there may be peeling-off of the sticker or degradation of character printing due to adhesion degradation.

| | |
|---|---|
| ⚠ Precaution | Unincorporated measurement units that are not decided by the measurement laws are included in this unit seal. |

CHINO

CHINO CORPORATION

32-8,KUMANO-CHO,ITABASHI-KU,TOKYO 173-8632

Telephone:81-3-3956-2171
Facsimile:81-3-3956-0915
E-mail: inter@chino.co.jp

Printed in Japan (  )